Version: 1-8-2021

www.gazzda.com

GAZZDA

Ena storage

Product sheet

design by
Salih Teskeredžić

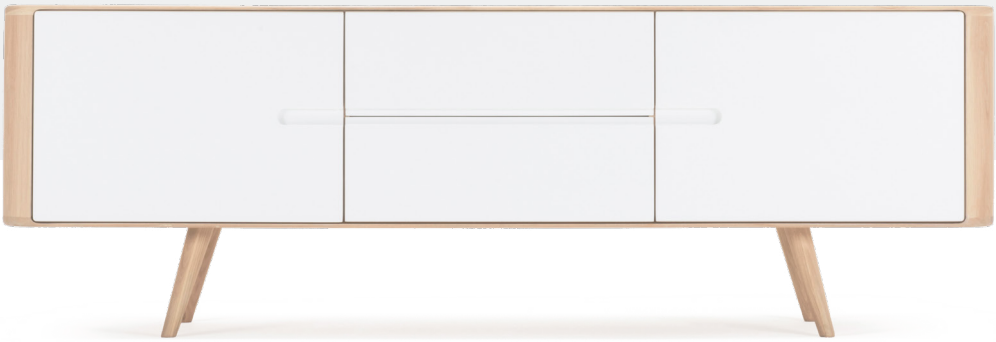

Ena storage units

Product facts

Version: 1-8-2021

Materials

Body	Solid oak
Finish	Hardwax oil
Fronts	MDF - White

Technical features

Structural frame
Storage unit's body, as well as all inside shelves and drawer boxes are made out of solid wood - oak, except the thin storage unit back panel and drawer bottom panels which are made of high-density fiberboard.

Finish
Available in two plant-based Hardwax oil finishes (colours), which retain the wood's natural state, as a white or natural oil.

Fronts
Storage unit and drawer front panels are made out of MDF medium-density fiberboard (wooden fibre panels made with high temperature pressing technology) coated in white enamel color.

Legs
Storage units legs are demountable and are also made out of solid wood - oak.

Cleaning
Please see Product or Material page on our website.

Notes to consider

Variations
Natural variations in wood color and surface may occur. Regular maintenance will ensure the wood preserves its authentic beauty and can last for generations.

Product changes
Please note that Gazzda reserves the right to alter construction and design without notice.

Dimensions (tolerances)
The dimensions shown are indicative, they may vary due to the natural properties of wood, season, or manufacturing processes. Deviations from the specified size may occur, usually no more than 1 cm.

For all additional inquiries regarding Ena storage units please feel free to contact us.

Reference - Internal storage symbols

Space	C - Compartment D - Drawer S - Shelf CH - Cable hole
Position	U - Upper M - Middle B - Bottom R - Right L - Left
Shape	RC - Rectangular CR - Circular
e.g.	C-UR | Compartment - upper right D-BL | Drawer - bottom left CH-RC | Cable hole - rectangular
Shelves	Shelves indicated with triangle arrows are height-adjustable and removable.

GAZZDA

Version: 1-8-2021

Ena lowboard 135 x 42

Body Solid oak, Fronts MDF

Basic info

Design	Salih Teskeredžić
Product size	W: 135, D: 42, H: 45
Packaging	W: 142, D: 46, H: 28
Volume	0,18 m^3
Net weight	26,3 kg
Gross weight	28,9 kg

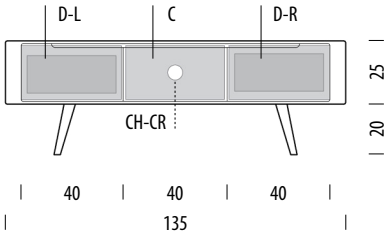

Item no. 152 **Assembly** 15 min / 2 persons

Internal storage	Width	Depth	Height
D-L	35	32	15
C	39	39	21
D-R	35	32	15
CH-RC	Ø6		

GAZZDA

Version: 1-8-2021

Ena lowboard 135 x 55

Body Solid oak, Fronts MDF

Basic info

Design	Salih Teskeredžić
Product size	W: 135, D: 55, H: 45
Packaging	W: 142, D: 59, H: 28
Volume	0,23 m³
Net weight	33,5 kg
Gross weight	36,6 kg

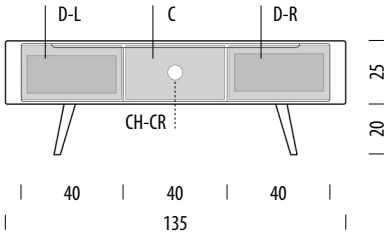

Item no. 157 **Assembly** 15 min / 2 persons

Internal storage	Width	Depth	Height
D-L	35	42	15
C	39	52	21
D-R	35	42	15
CH-RC	Ø6		

GAZZDA

Version: 1-8-2021

Ena lowboard 180 x 42

Body Solid oak, Fronts MDF

Basic info

Design	Salih Teskeredžić
Product size	W: 180, D: 42, H: 45
Packaging	W: 187, D: 46, H: 28
Volume	0,24 m^3
Net weight	32,5 kg
Gross weight	36,6 kg

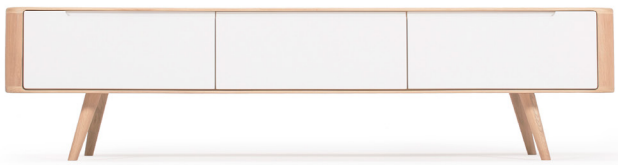

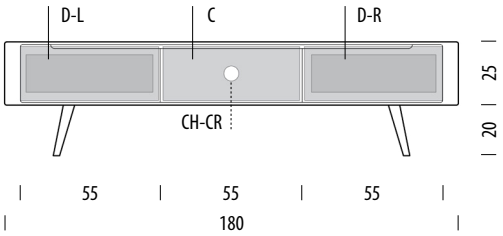

Item no. 153 **Assembly** 15 min / 2 persons

Internal storage	Width	Depth	Height
D-L	50	32	15
C	54	39	21
D-R	50	32	15
CH-RC	Ø6		

GAZZDA

Version: 1-8-2021

Ena lowboard 180 x 55

Body Solid oak, Fronts MDF

Basic info

Design	Salih Teskeredžić
Product size	W: 180, D: 55, H: 45
Packaging	W: 187, D: 59, H: 28
Volume	0,31 m³
Net weight	41,4 kg
Gross weight	45,9 kg

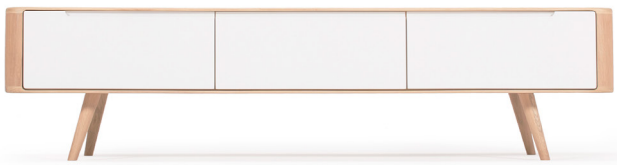

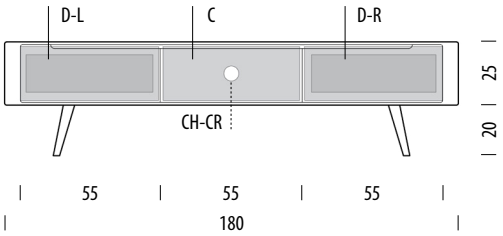

Item no. 158 **Assembly** 15 min / 2 persons

Internal storage	Width	Depth	Height
D-L	50	42	15
C	54	52	21
D-R	50	42	15
CH-RC	Ø6		

GAZZDA

Version: 1-8-2021

Ena lowboard 225 x 42

Body Solid oak, Fronts MDF

Basic info

Design	Salih Teskeredžić
Product size	W: 225, D: 42, H: 45
Packaging	W: 232, D: 46, H: 28
Volume	0,30 m³
Net weight	40 kg
Gross weight	44,4 kg

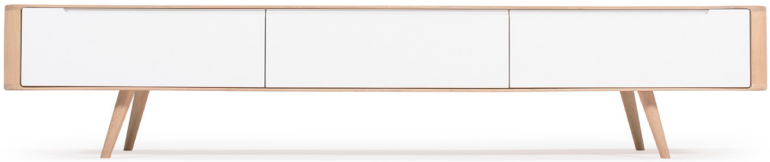

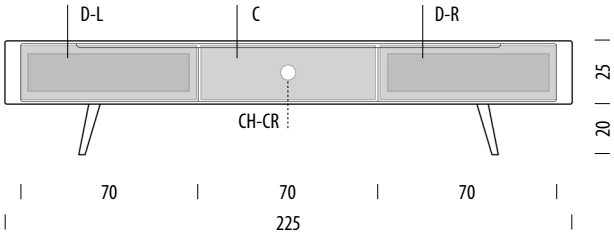

Item no. 154 **Assembly** 15 min / 2 persons

Internal storage	Width	Depth	Height
D-L	65	32	15
C	69	39	21
D-R	65	32	15
CH-RC	Ø6		

Selected options

Body

Oiled Oak
1015
White oil

Front panels

MDF
White enamel
RAL 9010

Indicated materials and colours are selected by Gazzda as best-selling items. The lead time of selected options is 1-5 weeks. For an accurate lead time, please consult customer service.

For other material options, please see the Available materials section at the end of the product sheet.

GAZZDA

Version: 1-8-2021

Ena lowboard 225 x 55

Body Solid oak, Fronts MDF

Basic info

Design	Salih Teskeredžić
Product size	W: 225, D: 55, H: 45
Packaging	W: 232, D: 59, H: 28
Volume	0,38 m³
Net weight	51,3 kg
Gross weight	55,7 kg

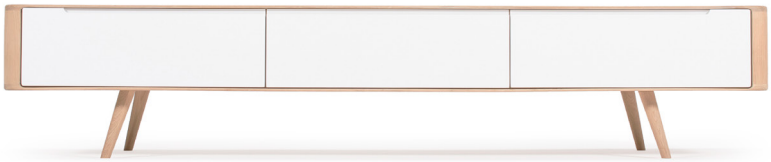

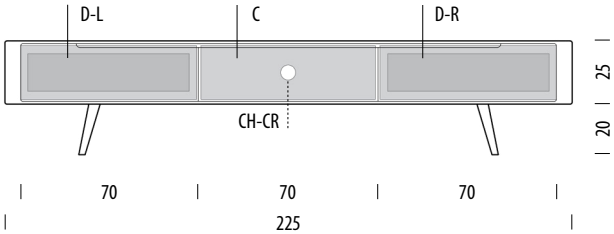

Item no. 159 **Assembly** 15 min / 2 persons

Internal storage	Width	Depth	Height
D-L	65	42	15
C	69	52	21
D-R	65	42	15
CH-RC	Ø6		

GAZZDA

Version: 1-8-2021

Ena sideboard 135

Body Solid oak, Fronts MDF

Basic info

Design	Salih Teskeredžić
Product size	W: 135, D: 42, H: 60
Packaging	W: 141, D: 46, H: 43,5
Volume	0,28 m³
Net weight	39,5 kg
Gross weight	43,2 kg

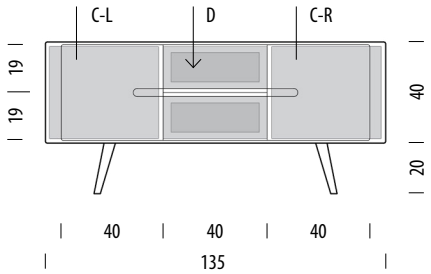

Item no. 051 **Assembly** 15 min / 2 persons

Internal storage	Width	Depth	Height
C-L	44	39	36
D (each)	35	32	12
C-R	44	39	36

GAZZDA

Version: 1-8-2021

Ena sideboard 180

Body Solid oak, Fronts MDF

Basic info

Design	Salih Teskeredžić
Product size	W: 180, D: 42, H: 60
Packaging	W: 186, D: 46, H: 43,5
Volume	0,37 m³
Net weight	48,2 kg
Gross weight	52 kg

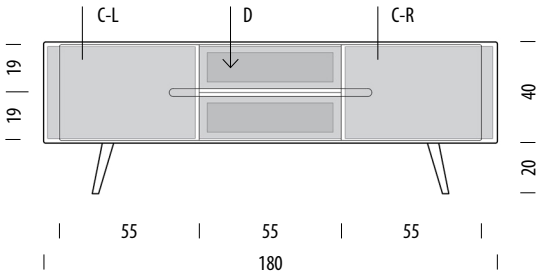

Item no. 052 **Assembly** 15 min / 2 persons

Internal storage	Width	Depth	Height
C-L	58	39	36
D (each)	50	32	12
C-R	58	39	36

Selected options

Body

Oiled Oak
1015
White oil

Front panels

MDF
White enamel
RAL 9010

Indicated materials and colours are selected by Gazzda as best-selling items. The lead time of selected options is 1-5 weeks. For an accurate lead time, please consult customer service.

For other material options, please see the Available materials section at the end of the product sheet.

GAZZDA

Version: 1-8-2021

Ena TV sideboard 135

Body Solid oak, Fronts MDF

Basic info

Design	Salih Teskeredžić
Product size	W: 135, D: 42, H: 60
Packaging	W: 141, D: 46, H: 43,5
Volume	0,28 m³
Net weight	43,6 kg
Gross weight	47,2 kg

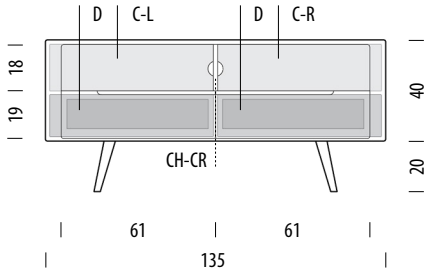

Item no. 05A **Assembly** 15 min / 2 persons

Internal storage	Width	Depth	Height
C-L	65	39	18
D (each)	56	32	12
C-R	65	39	18
CH-RC	Ø6		

GAZZDA

Version: 1-8-2021

Ena TV sideboard 160

Body Solid oak, Fronts MDF

Basic info

Design	Salih Teskeredžić
Product size	W: 160, D: 42, H: 60
Packaging	W: 166, D: 46, H: 43,5
Volume	0,33 m³
Net weight	43,1 kg
Gross weight	47,4 kg

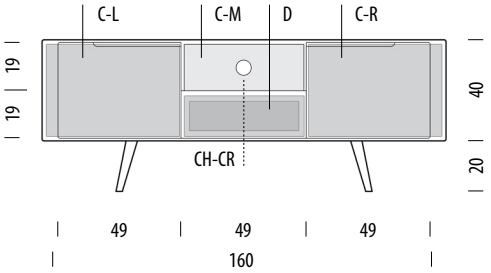

Item no. 059 **Assembly** 15 min / 2 persons

Internal storage	Width	Depth	Height
C-L	52	39	36
C-M	47	39	18
D	43	32	12
C-R	52	39	36
CH-RC	Ø6		

GAZZDA

Version: 1-8-2021

Ena nightstand 60 - 2 drawers

Body Solid oak, Fronts MDF

Basic info

Design	Salih Teskeredžić
Product size	W: 60, D: 42, H: 40
Packaging	W: 64, D: 46, H: 34
Volume	0,10 m^3
Net weight	21,5 kg
Gross weight	23,1 kg

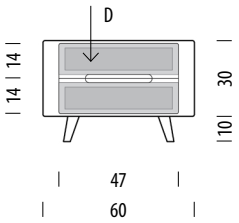

Item no. 021 **Assembly** 20 min / 1 person

Internal storage	Width	Depth	Height
D (each)	42	32	9

Ena nightstand 55 - 1 drawer

Body Solid oak, Fronts MDF

Version: 1-8-2021

Basic info

Design	Salih Teskeredžić
Product size	W: 55, D: 42, H: 40
Packaging	W: 59, D: 46, H: 24
Volume	0,07 m^3
Net weight	15 kg
Gross weight	16,9 kg

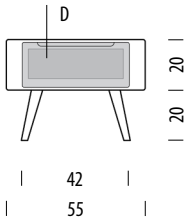

Item no. 044 **Assembly** 20 min / 1 person

Internal storage	Width	Depth	Height
D	37	32	12

GAZZDA

Version: 1-8-2021

Ena drawer 90 - 3 drawers

Body Solid oak, Fronts MDF

Basic info

Design	Salih Teskeredžić
Product size	W: 90, D: 42, H: 90
Packaging	W: 94, D: 46, H: 74
Volume	0,32 m^3
Net weight	50,1 kg
Gross weight	54,5 kg

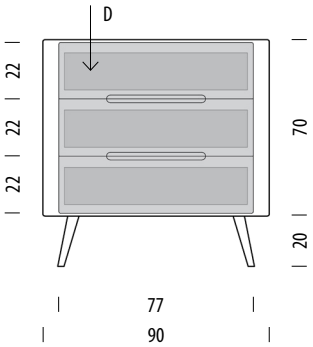

Item no. 072 **Assembly** 20 min / 2 persons

Internal storage	Width	Depth	Height
D (each)	72	32	15

Ena drawer 120 - 4 drawers

Body Solid oak, Fronts MDF

Version: 1-8-2021

Basic info

Design	Salih Teskeredžić
Product size	W: 120, D: 42, H: 90
Packaging	W: 124, D: 46, H: 74
Volume	0,42 m^3
Net weight	63,4 kg
Gross weight	68,2 kg

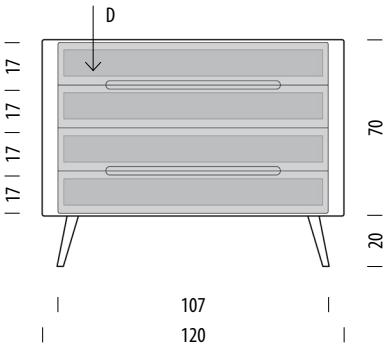

Item no. 073 **Assembly** 20 min / 2 persons

Internal storage	Width	Depth	Height
D (each)	102	32	11

GAZZDA

Version: 1-8-2021

Ena shoe cabinet

Body Solid oak, Fronts MDF

Basic info

Design	Salih Teskeredžić
Product size	W: 90, D: 35, H: 110
Packaging	W: 94, D: 39, H: 94
Volume	0,35 m³
Net weight	49,5 kg
Gross weight	53,3 kg

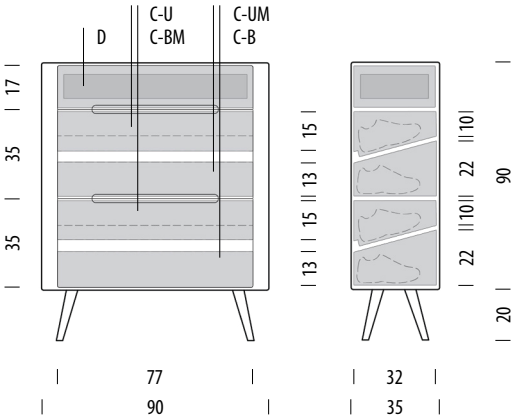

Item no. 07D **Assembly** 15 min / 2 persons

Internal storage	Width	Depth	Height
D	73	27	10
C-U / C-BM	86	32	15>10
C-UM / C-B	82	32	13<22

GAZZDA

Version: 1-8-2021

Ena dresser 90

Body Solid oak, Fronts MDF

Basic info

Design	Salih Teskeredžić
Product size	W: 90, D: 42, H: 110
Packaging	W: 94, D: 46, H: 94
Volume	0,41 m^3
Net weight	52,8 kg
Gross weight	56,4 kg

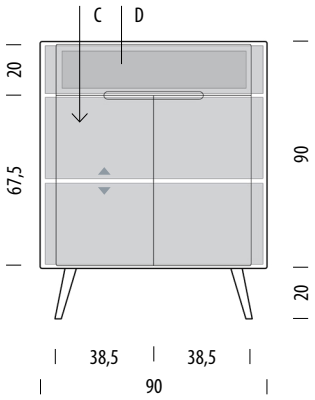

Item no. 074 **Assembly** 15 min / 2 persons

Internal storage	Width	Depth	Height
D	73	32	15
C (each)	86	39	29-35

▲ ▼ Shelves indicated with triangle arrows are height-adjustable and removable.

GAZZDA

Version: 1-8-2021

Ena dresser 135

Body Solid oak, Fronts MDF

Basic info

Design	Salih Teskeredžić
Product size	W: 135, D: 42, H: 110
Packaging	W: 141, D: 46, H: 94
Volume	0,61 m^3
Net weight	78,8 kg
Gross weight	84,7 kg

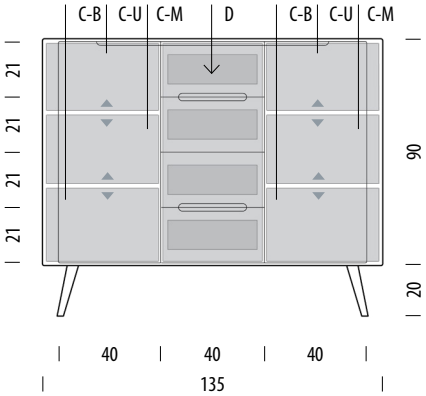

Item no. 075 **Assembly** 15 min / 2 persons

Internal storage	Width	Depth	Height
C-U	44	39	23-30
C-M	44	39	21-33
C-B	44	39	25-32
D (each)	35	32	12

▲ Shelves indicated with triangle arrows are
▼ height-adjustable and removable.

GAZZDA

Version: 1-8-2021

Ena dresser 180

Body Solid oak, Fronts MDF

Basic info

Design	Salih Teskeredžić
Product size	W: 180, D: 42, H: 110
Packaging	W: 186, D: 46, H: 94
Volume	0,80 m³
Net weight	94,7 kg
Gross weight	101,9 kg

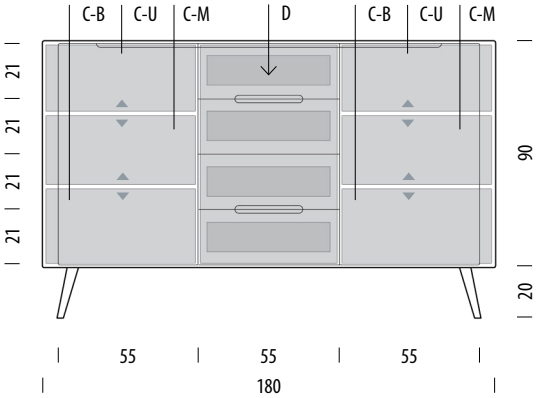

Item no. 076 **Assembly** 15 min / 2 persons

Internal storage	Width	Depth	Height
C-U	59	39	23-30
C-M	59	39	21-33
C-B	59	39	25-32
D (each)	50	32	12

▲ Shelves indicated with triangle arrows are
▼ height-adjustable and removable.

Ena cabinet 60 x 110

Body Solid oak, Fronts MDF

Version: 1-8-2021

Basic info

Design	Salih Teskeredžić
Product size	W: 60, D: 42, H: 110
Packaging	W: 64, D: 46, H: 94
Volume	0,28 m³
Net weight	34,6 kg
Gross weight	36,6 kg

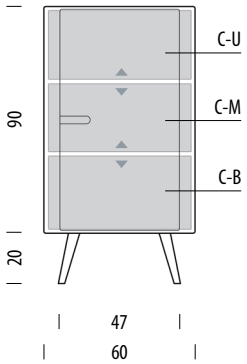

Item no. 05F **Assembly** 15 min / 2 persons

Internal storage	Width	Depth	Height
C-U	56	39	23-30
C-M	56	39	21-33
C-B	56	39	25-32

▲ ▼ Shelves indicated with triangle arrows are height-adjustable and removable.

Version: 1-8-2021

Ena cabinet 60 x 170

Body Solid oak, Fronts MDF

Basic info

Design	Salih Teskeredžić
Product size	W: 60, D: 42, H: 170
Packaging	W: 64, D: 46, H: 154
Volume	0,45 m³
Net weight	50,3 kg
Gross weight	53,6 kg

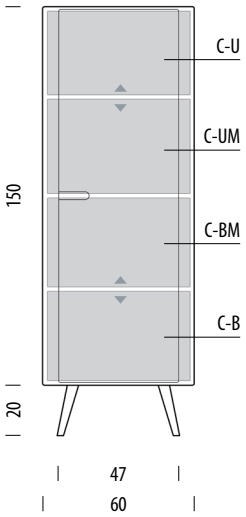

Item no. 061 **Assembly** 15 min / 2 persons

Internal storage	Width	Depth	Height
C-U	56	39	30-36
C-UM	56	39	34-40
C-BM	56	39	32-38
C-B	56	39	32-38

▲ ▼ Shelves indicated with triangle arrows are height-adjustable and removable.

GAZZDA

Version: 1-8-2021

Ena cabinet 90 x 110

Body Solid oak, Fronts MDF

Basic info

Design	Salih Teskeredžić
Product size	W: 90, D: 42, H: 110
Packaging	W: 94, D: 46, H: 94
Volume	0,41 m³
Net weight	53,9 kg
Gross weight	56,4 kg

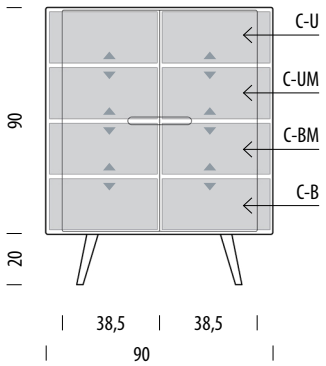

Item no. 05B **Assembly** 15 min / 2 persons

Internal storage	Width	Depth	Height
C-U (each)	42	39	17-23,5
C-UM (each)	42	39	14-26,5
C-BM (each)	42	39	14-26,5
C-B (each)	42	39	17-23,5

▲ ▼ Shelves indicated with triangle arrows are height-adjustable and removable.

Version: 1-8-2021

Ena cabinet 90 x 170

Body Solid oak, Fronts MDF

Basic info

Design	Salih Teskeredžić
Product size	W: 90, D: 42, H: 170
Packaging	W: 94, D: 46, H: 154
Volume	0,67 m^3
Net weight	73,4 kg
Gross weight	80,1 kg

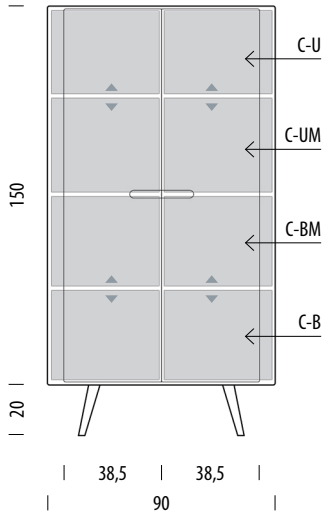

Item no. 05D **Assembly** 15 min / 2 persons

Internal storage	Width	Depth	Height
C-U (each)	42	39	30-36
C-UM (each)	42	39	34-40
C-BM (each)	42	39	32-38
C-B (each)	42	39	32-38

▲ ▼ Shelves indicated with triangle arrows are height-adjustable and removable.

GAZZDA

Version: 1-8-2021

Ena shelf 125

Body Solid oak, Fronts MDF

Basic info

Design	Salih Teskeredžić
Product size	W: 60, D: 42, H: 125
Packaging	W: 64, D: 46, H: 109
Volume	0,32 m^3
Net weight	38 kg
Gross weight	41,5 kg

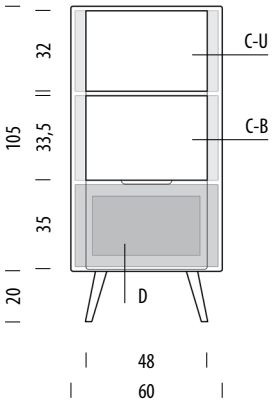

Item no. 063 **Assembly** 15 min / 2 persons

Internal storage	Width	Depth	Height
C-U	56	39	32
C-B	56	39	33,5
D	42	31	24

GAZZDA

Version: 1-8-2021

Ena shelf 196

Body Solid oak, Fronts MDF

Basic info

Design	Salih Teskeredžić
Product size	W: 60, D: 42, H: 196
Packaging	W: 64, D: 46, H: 180
Volume	0,53 m³
Net weight	54,5 kg
Gross weight	58,5 kg

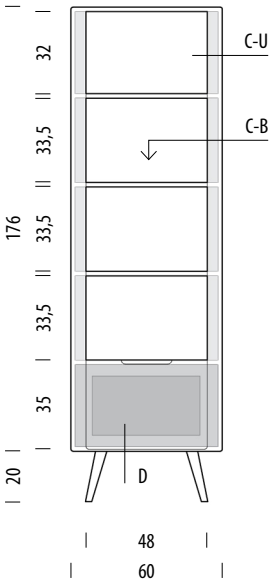

Item no. 064 **Assembly** 20 min / 2 persons

Internal storage	Width	Depth	Height
C-U	56	39	32
C-B	56	39	33,5
D	42	31	24

GAZZDA

Version: 1-8-2021

Ena room divider

Body Solid oak, Fronts MDF

Basic info

Design	Salih Teskeredžić
Product size	W: 90, D: 35, H: 200
Packaging	W: 94, D: 39, H: 184
Volume	0,68 m³
Net weight	46,3 kg
Gross weight	52,2 kg

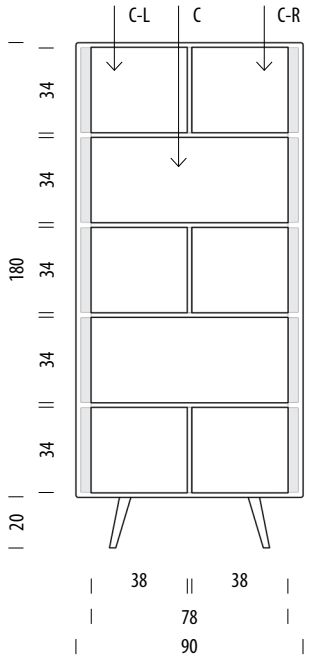

Item no. 080 **Assembly** 15 min / 2 persons

Internal storage	Width	Depth	Height
C-L (each)	42	31,5	34
C-R (each)	42	31,5	34
C	86	31,5	34

GAZZDA

Version: 1-8-2021

Ena wardrobe

Body Solid oak, Fronts MDF

Basic info

Design	Salih Teskeredžić
Product size	W: 90, D: 55, H: 200
Packaging	W: 94, D: 59, H: 184
Volume	1,02 m^3
Net weight	89,9 kg
Gross weight	98,2 kg

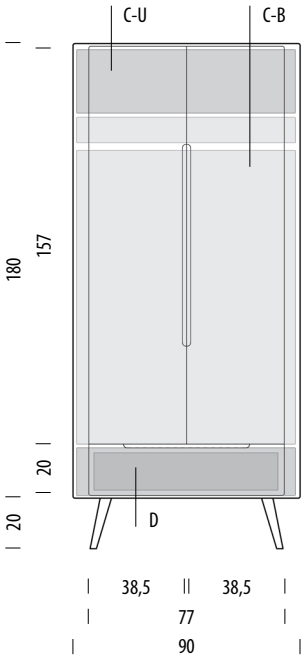

Item no. 06D **Assembly** 20 min / 2 persons

Internal storage	Width	Depth	Height
C-U	86	48	25
C-B	86	48	129
D	73	42	15

Ena storage units

Available materials

Version: 1-8-2021

Body | Solid oak

Oiled
1015
White oil

Oiled
1505
Natural oil

Front panels | MDF

MDF
White enamel
RAL 9010