Ethnicraft

ASSEMBLY INSTRUCTIONS FOR DINING TABLE INSTALLATION

OAK BOK ROUND EXTENDABLE DINING TABLE

CODE	DESCRIPTION
51527	OAK BOK ROUND EXTENDABLE DINING TABLE 129-179/129/76
51528	OAK BOK BLACK ROUND EXTENDABLE DINING TABLE 129-179/129/76

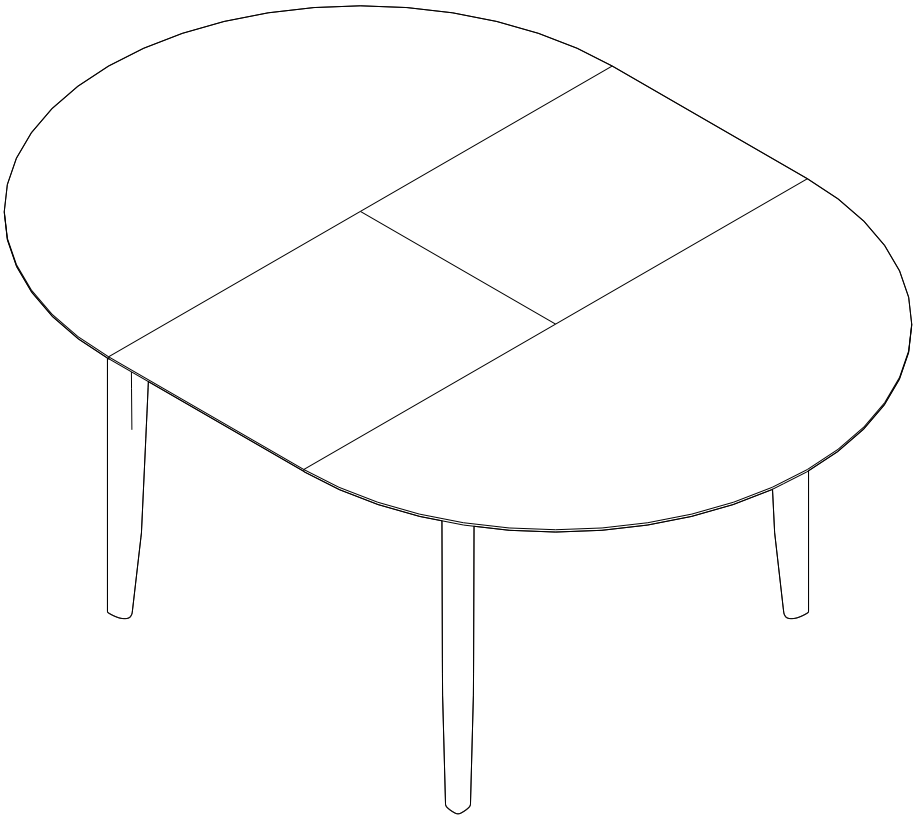

Ethnicraft

OAK BOK ROUND EXTENDABLE DINING TABLE
ASSEMBLY INSTRUCTIONS FOR DINING TABLE INSTALLATION

NOTE

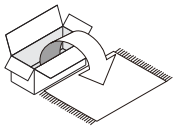

- CAREFULLY OPEN THE CARTON,
- REMOVE CONTENTS AND LAY OUT ON CARPET OR THE PACKAGING CARTON BOX OR OTHER PROTECTIVE SURFACE TO AVOID DAMAGE.
- CHECK PACKAGE CONTENTS TO ASSURE ALL THE NECESSARY HARDWARE AND PARTS ARE RECEIVED UNDAMAGED.
- DO NOT USE DAMAGE OR DEFECTIVE PARTS/HARDWARE.
- CONTACT ETHNICRAFT FOR ANY MISSING PART AND /OR HARDWARE.

- READ THE ASSEMBLY INSTRUCTION BEFORE INSTALLATION AND CAREFULLY FOLLOW THE INSTRUCTION GIVEN.
- SEEK THE ADVICE OF A PROFESSIONAL IF YOU ARE NOT FAMILIAR WITH THESE INSTALLATIONS OR HAVE ANY DOUBTS ABOUT THE SAFETY OF THIS INSTALLATION.

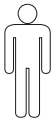

X2

- IT IS ADVISABLE TO DO THIS ASSEMBLY WITH MINIMUM OF 2 PERSONS.
- WHEN LIFTING THE TABLE, MAKE SURE TABLE IS IN UNEXTENDED POSITION.
- LIFT ONLY ON THE APRON.

PARTS TO ASSEMBLE

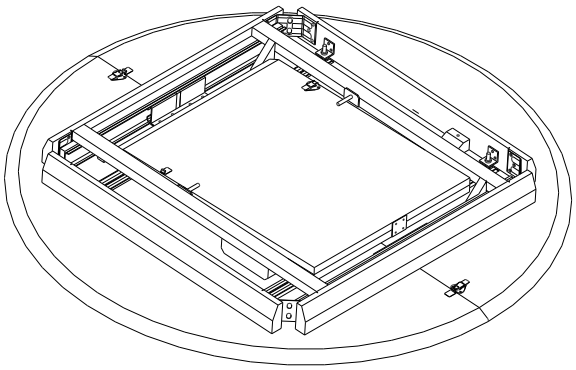

(A) TABLE TOP 1piece

CODE	DESCRIPTION
P4657	TABLE TOP
P4696	TABLE TOP - BLACK

(B) LEG (INTERCHANGEABLE) 4pieces

CODE	DESCRIPTION
P4656	LEG
P4691	LEG - BLACK

SYMBOLS

DIRECTION

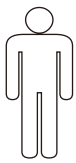

NUMBER OF PERSONS NEEDED

USE HAND

USE WRENCH TO TIGHTEN

HARDWARE ENCLOSED

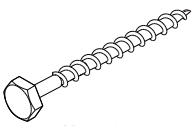 H2062 SCREW M8x80 (8pcs)	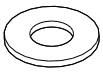 H0383 M8 (8pcs)

TOOL
(Not included in packaged)

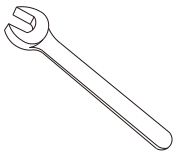

WRENCH

Ethnicraft

OAK BOK ROUND EXTENDABLE DINING TABLE
ASSEMBLY INSTRUCTIONS FOR DINING TABLE INSTALLATION

A. INSTALLING THE LEGS TO TABLE TOP

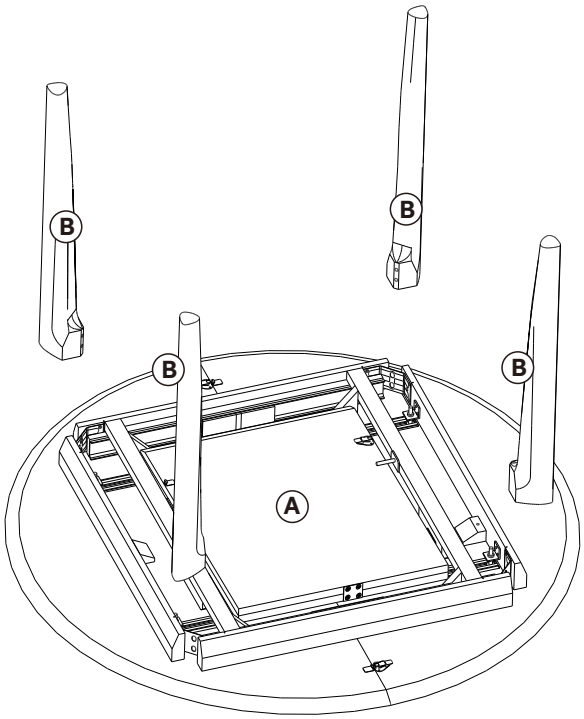

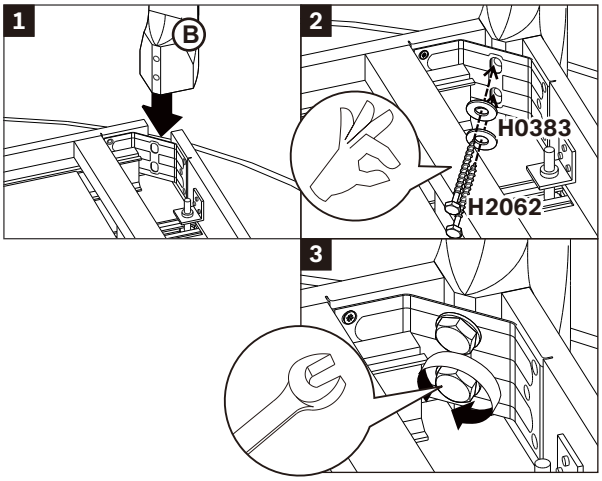

IMPORTANT :
- **USE WASHER M8**
- **USE SCREW M8x80**
- **TIGHTEN FULLY**

B. REMOVING METAL CLEAT

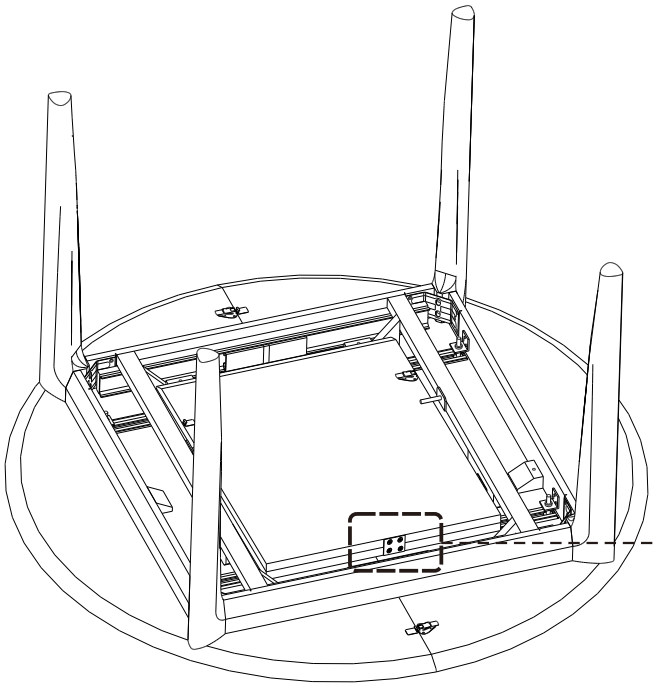

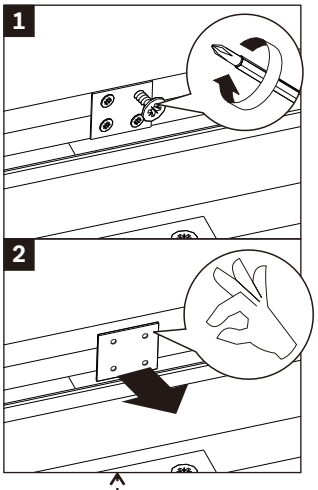

Ethnicraft

OAK BOK ROUND EXTENDABLE DINING TABLE
ASSEMBLY INSTRUCTIONS FOR DINING TABLE INSTALLATION

C. REMOVING METAL PLATE

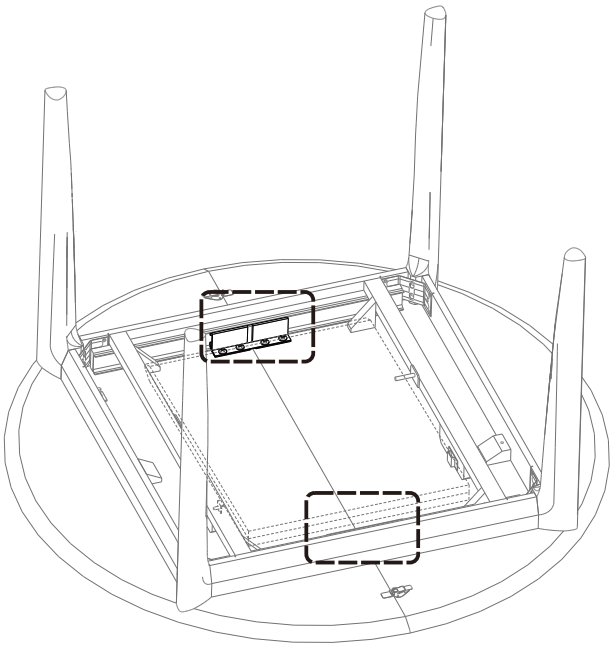

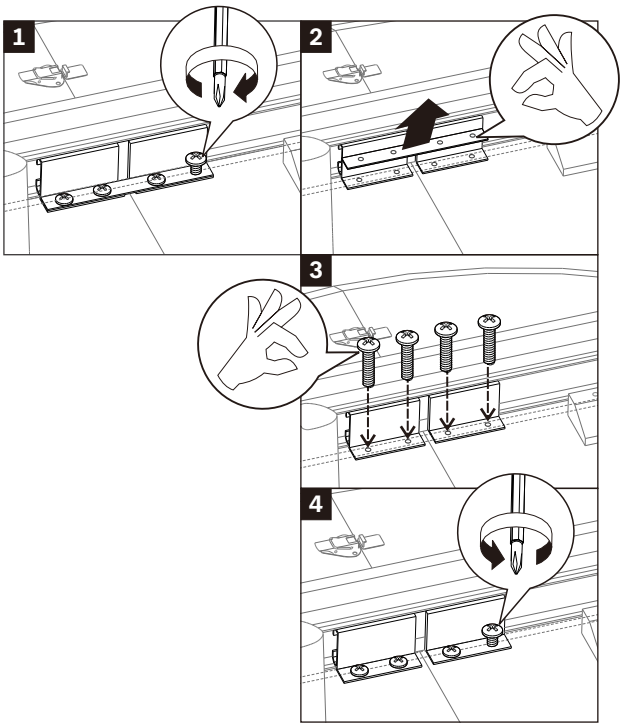

- DO NOT THROW AWAY THE SCREW. PUT THE SCREW BACK IN PLACE.
- TIGHTEN FULLY

D. REMOVING WOODEN PIECES

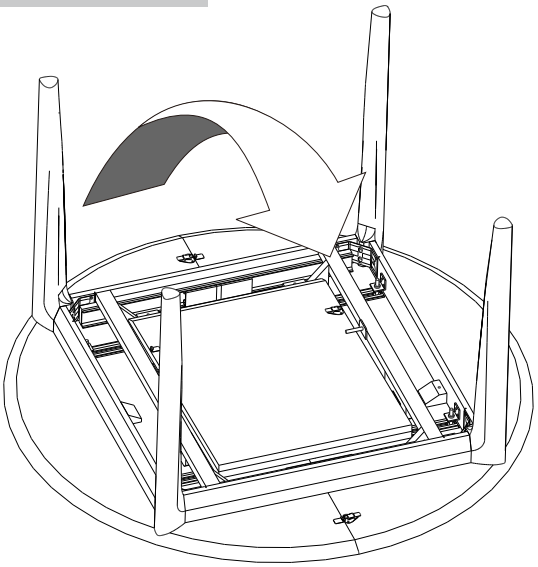

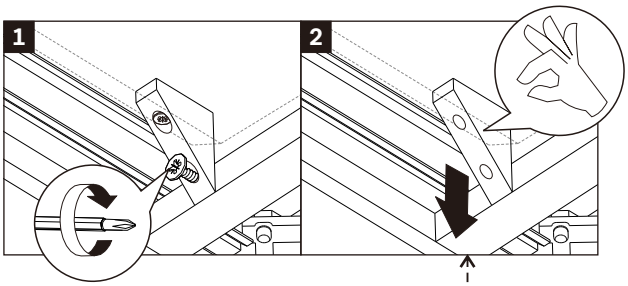

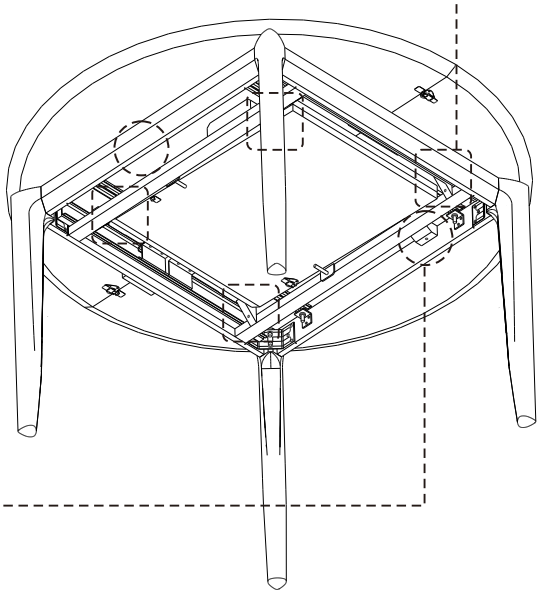

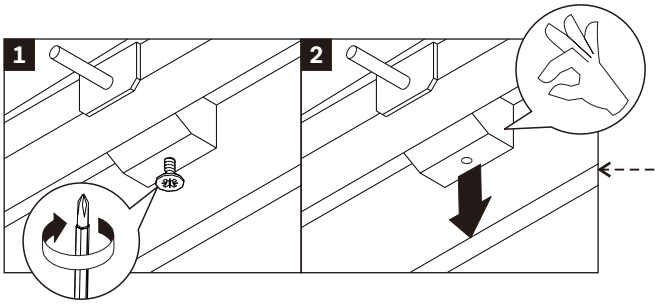

Ethnicraft

OAK BOK ROUND EXTENDABLE DINING TABLE
ASSEMBLY INSTRUCTIONS FOR DINING TABLE INSTALLATION

D. INSTALLING LEG SET TO TABLE TOP

RECOMMENDATION :

In order to avoid colour differences between the fixed table top and the extensions due to UV light, we suggest to put your dining table in extended version during the first month.

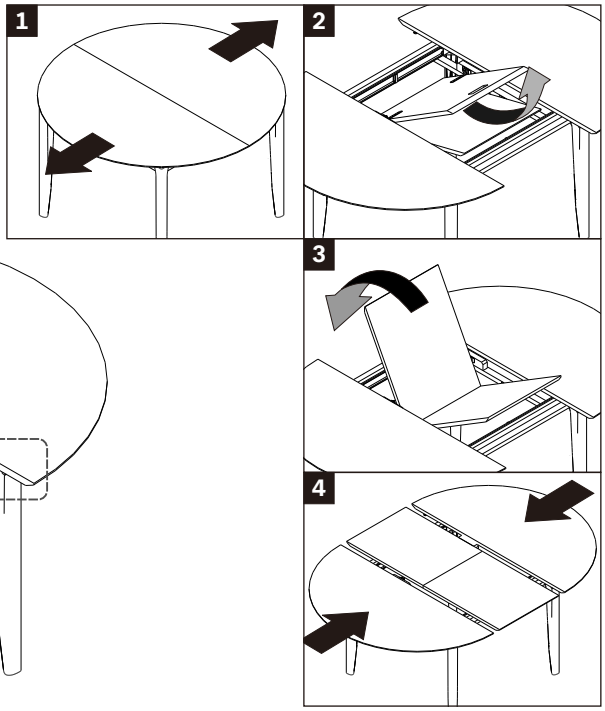

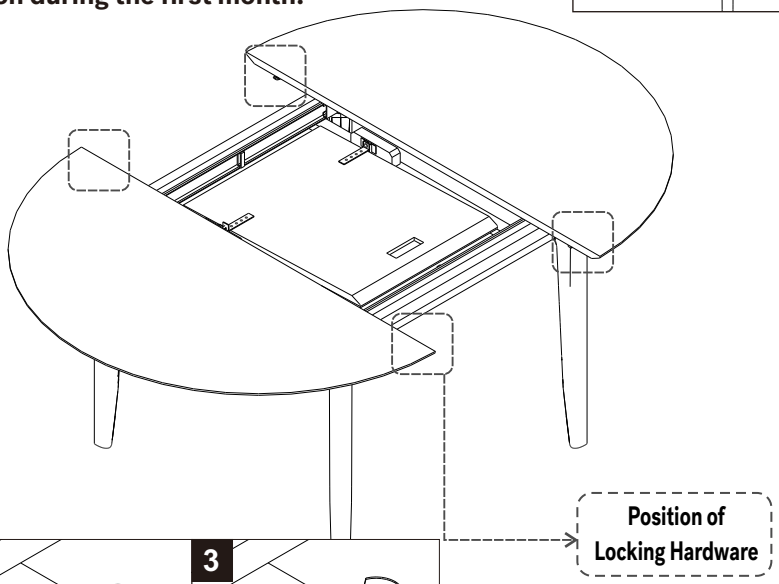

UNLOCK THE TABLE TOP

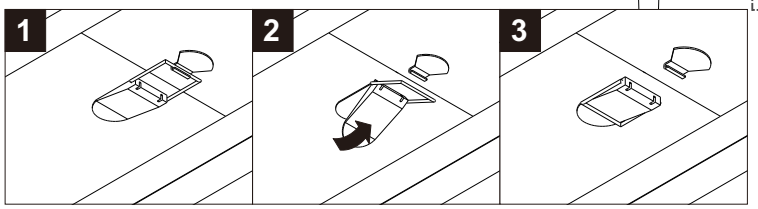

E. LOCK THE TABLE TOP

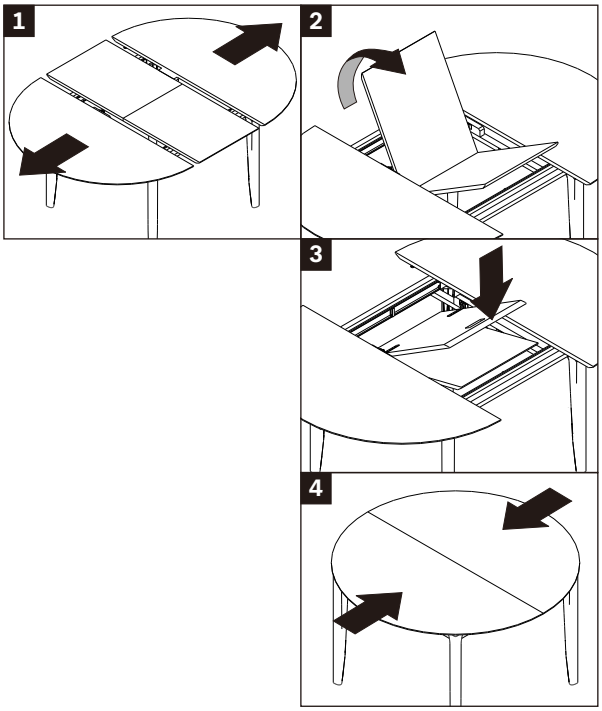

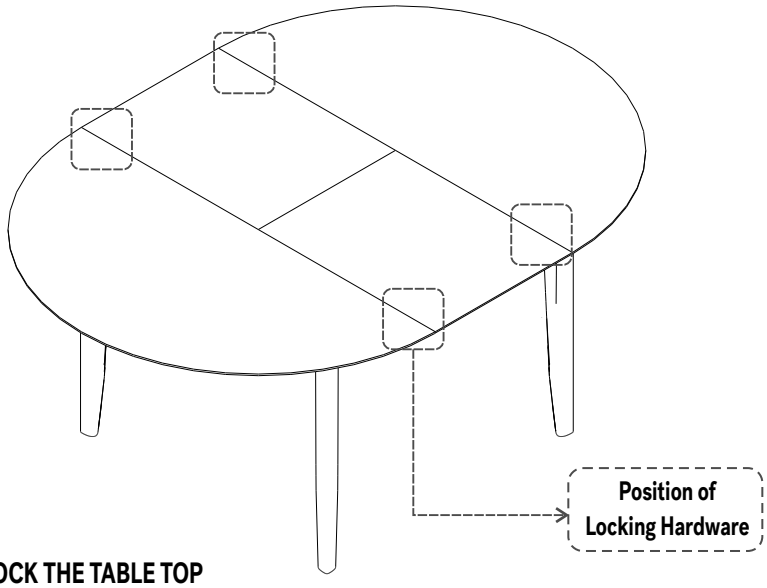
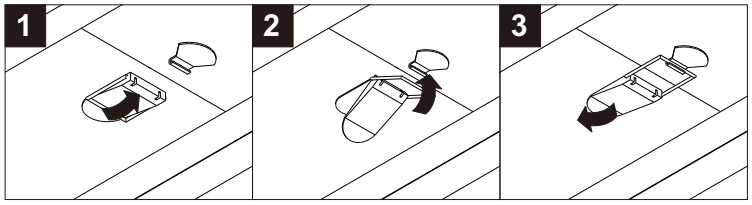
LOCK THE TABLE TOP