Ethnicraft

Origami desk - Dimensions (cm)

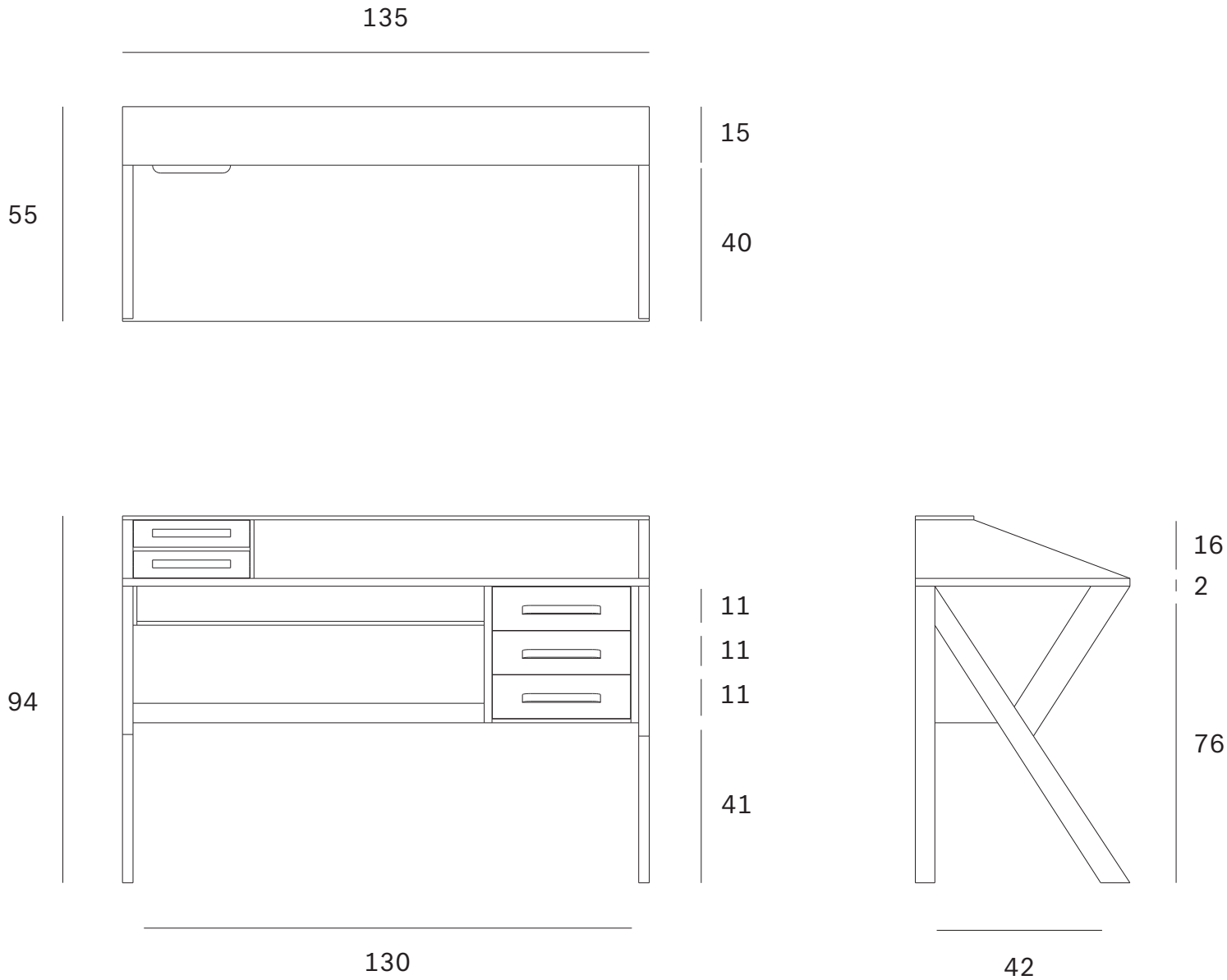

Ethnicraft

Origami desk - Dimensions (cm)

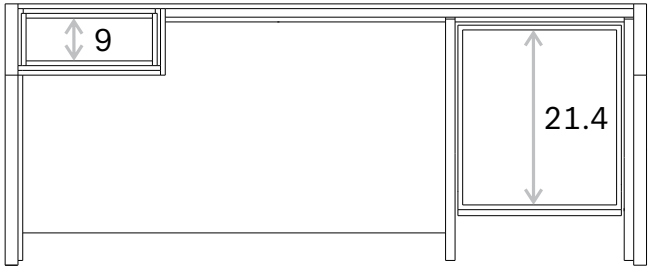

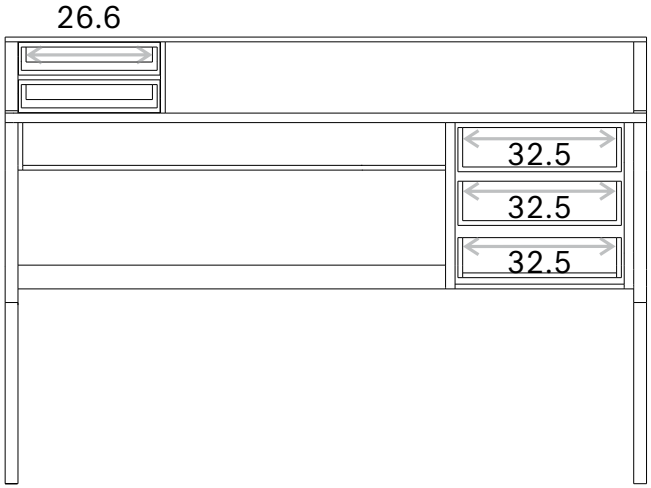

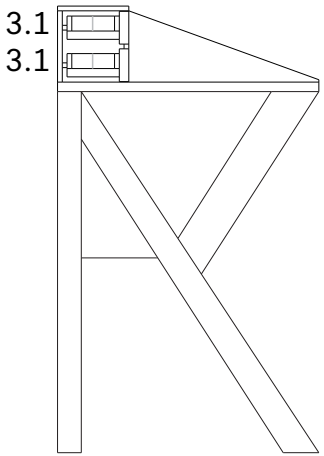

Ethnicraft

Origami desk - Dimensions (inches)

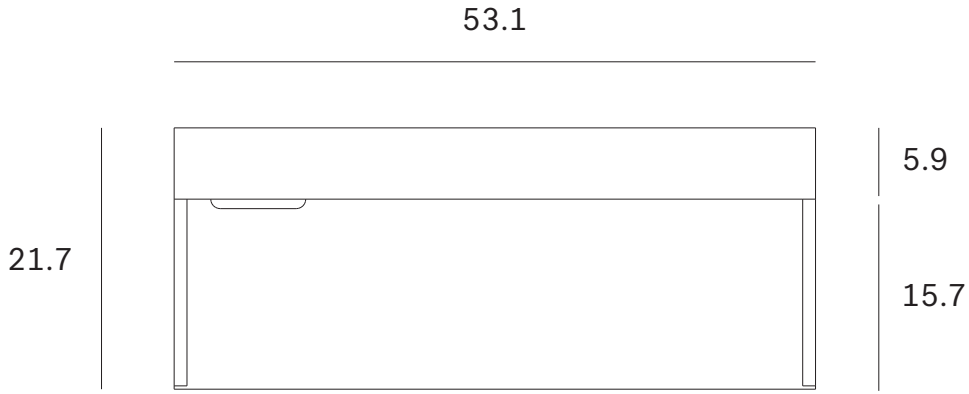

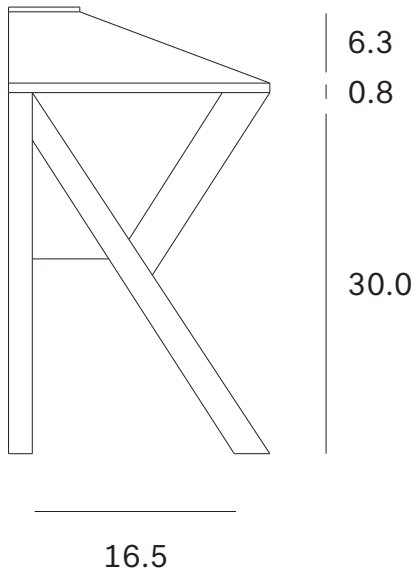

Ethnicraft

Origami desk - Dimensions (inches)

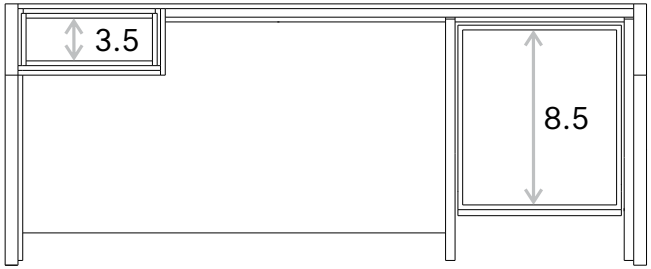

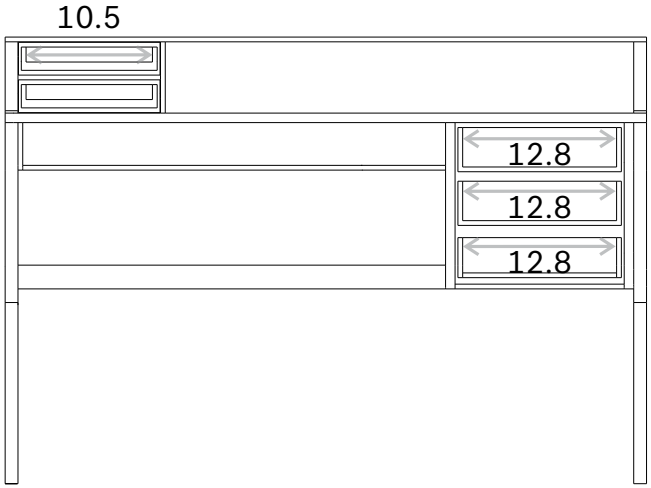

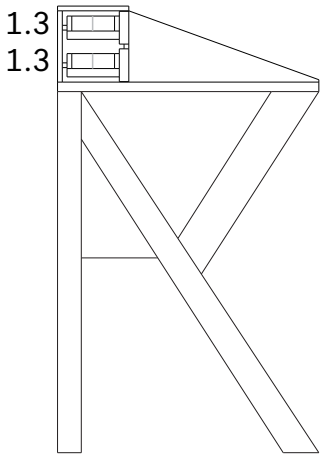

16.5