Version: 1-6-2024

www.gazzda.com

GAZZDA

Stafa Table

Product sheet

design by
Salih Teskeredžić



GAZZDA

Stafa Table

Product facts

Version: 1-6-2024

Materials

Plate	Solid oak / Linoleum
Legs	Solid oak
Finish	Hardwax oil

Technical features

Plate
The table plate is fully made out of solid wood - oak or desktop linoleum (natural, warm to the touch, smooth, antibacterial surface material) glued on beech plywood. The solid oak plate option has steel stiffeners at the bottom side of the plate which prevent minor changes in the dimensions of the wooden parts over time due to the hygroscopy.

Legs
Demountable legs and are also made out of solid oak.

Finish
Available in three plant-based Hardwax oil finishes (colors), which retain the wood's natural state: white, natural and smoked oil.

Cleaning
Please see Product or Material page on our website.

Notes to consider

Variations
Natural variations in wood color and surface may occur. Regular maintenance will ensure the wood preserves its authentic beauty and can last for generations.

Product changes
Please note that Gazzda reserves the right to alter construction and design without notice.

Dimensions (tolerances)
The dimensions shown are indicative, they may vary due to the natural properties of wood, season, or manufacturing processes. Deviations from the specified size may occur, usually no more than 1 cm.

For all additional inquiries regarding Stafa Tables please feel free to contact us.

Stafa Round Table Ø90

Base Solid oak, Plate Solid oak

Version: 1-6-2024

Basic info

Design	Salih Teskeredžić
Product size	W: Ø90, H: 75
Packaging	W: 96, D: 95, H: 13
Volume	0,12 m^3
Net weight	17,8 kg
Gross weight	20 kg



Item no. 100

Assembly 15 min / 2 persons

Leg spacing	Width	Depth	Height
Floor level	72		
Seat height	47		
Apron height	37		

Plate	Thickness
	2,5

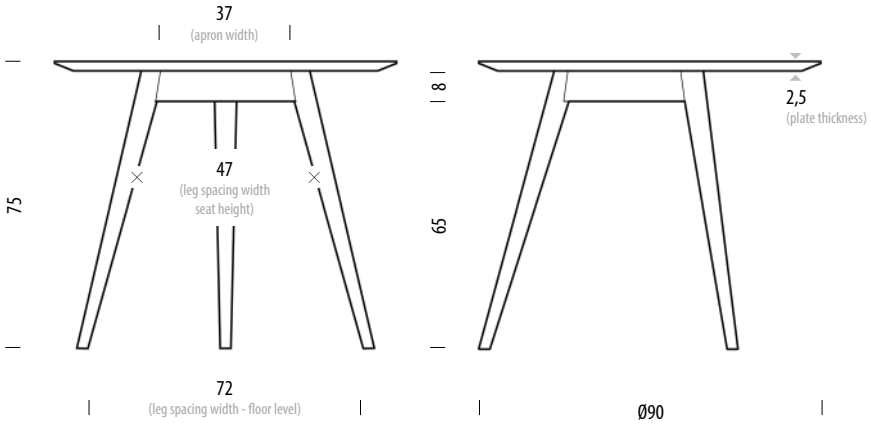

Stafa Table 80

Base Solid oak, Plate Solid oak / Linoleum

Version: 1-6-2024

Basic info

Design	Salih Teskeredžić	
Product size	W: 80, D: 80, H: 75	
Packaging	W: 85, D: 85, H: 13	
Volume	0,09 m^3	
Net weight	18,4 kg	13 kg
Gross weight	21,9 kg (oak)	15,5 kg (linoleum)



Item no. 2F5 / 381

Assembly 15 min / 2 persons

Leg spacing	Width	Depth	Height
Floor level	69	69	
Seat height	48	48	
Apron height	39	39	

Plate	Thickness
	2 / 2,5

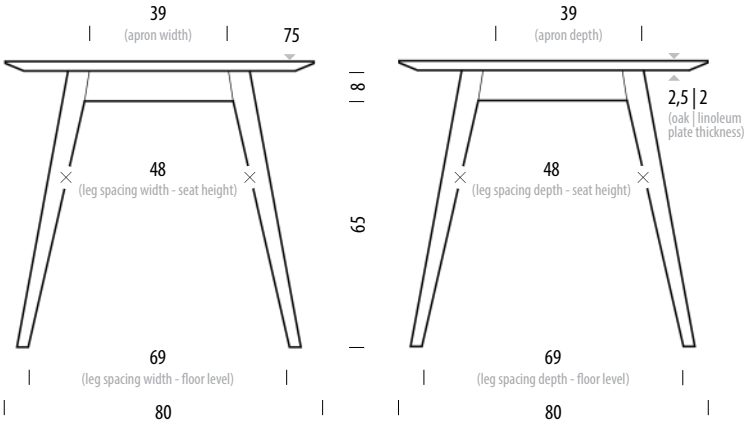

GAZZDA

Version: 1-6-2024

Stafa Table 140

Base Solid oak, Plate Solid oak / Linoleum

Basic info

Design	Salih Teskeredžić	
Product size	W: 140, D: 90, H: 75	
Packaging	W: 146, D: 93, H: 13	
Volume	0,17 m³	
Net weight	37,2 kg	28,1 kg
Gross weight	40,7 kg (oak)	31,5 kg (linoleum)



Item no. 034 / 3CD

Assembly 15 min / 2 persons

Leg spacing	Width	Depth	Height
Floor level	124	75	
Seat height	103	54	
Apron height	94	45	

Plate	Thickness
	2 / 2,5

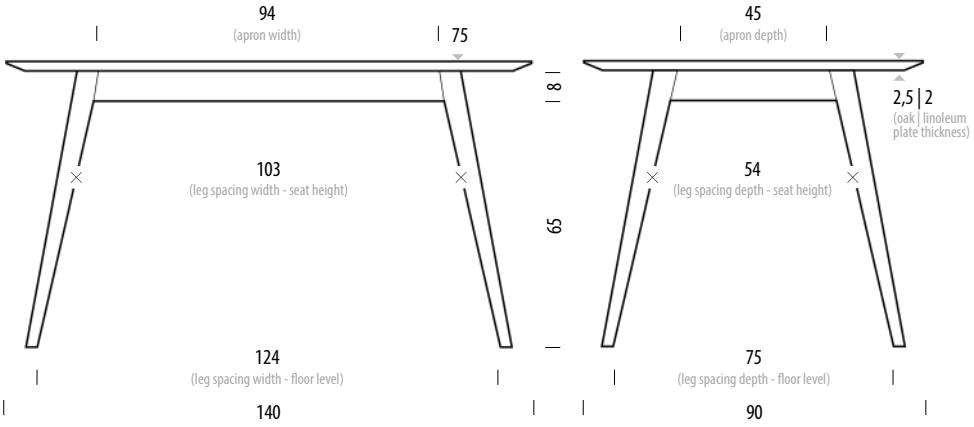

GAZZDA

Version: 1-6-2024

Stafa Table 160

Base Solid oak, Plate Solid oak / Linoleum

Basic info

Design	Salih Teskeredžić	
Product size	W: 160, D: 90, H: 75	
Packaging	W: 166, D: 93, H: 13	
Volume	0,20 m^3	
Net weight	40,1 kg	31,6 kg
Gross weight	44,1 kg (oak)	35,7 kg (linoleum)



Item no. 035 / 3CE

Assembly 15 min / 2 persons

Leg spacing	Width	Depth	Height
Floor level	133	75	
Seat height	111	54	
Apron height	102	45	

Plate	Thickness
	2 / 2,5

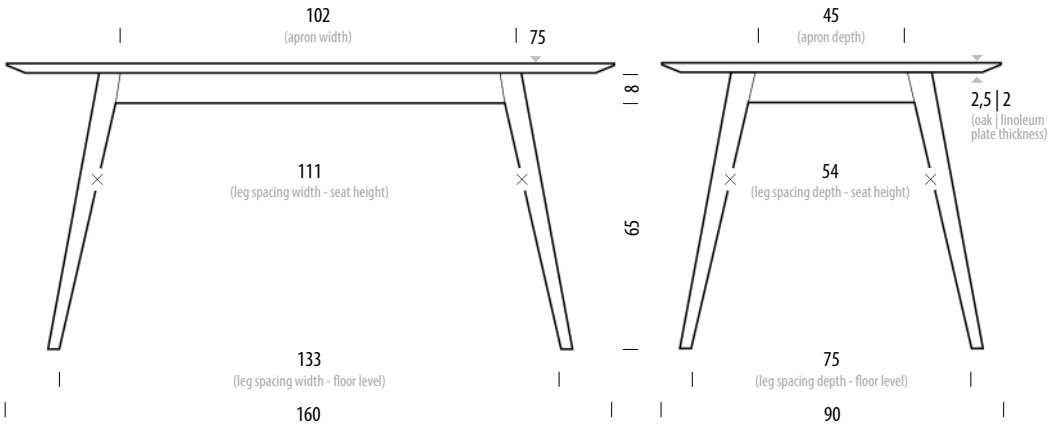

Stafa Table 180

Base Solid oak, Plate Solid oak / Linoleum

Version: 1-6-2024

Basic info

Design	Salih Teskeredžić	
Product size	W: 180, D: 90, H: 75	
Packaging	W: 186, D: 93, H: 13	
Volume	0,22 m³	
Net weight	45,5 kg	33,2 kg
Gross weight	49,9 kg (oak)	37,6 kg (linoleum)



Item no. 036 / 3CF

Assembly 15 min / 2 persons

Leg spacing	Width	Depth	Height
Floor level	164	75	
Seat height	143	54	
Apron height	134	45	

Plate	Thickness
	2 / 2,5

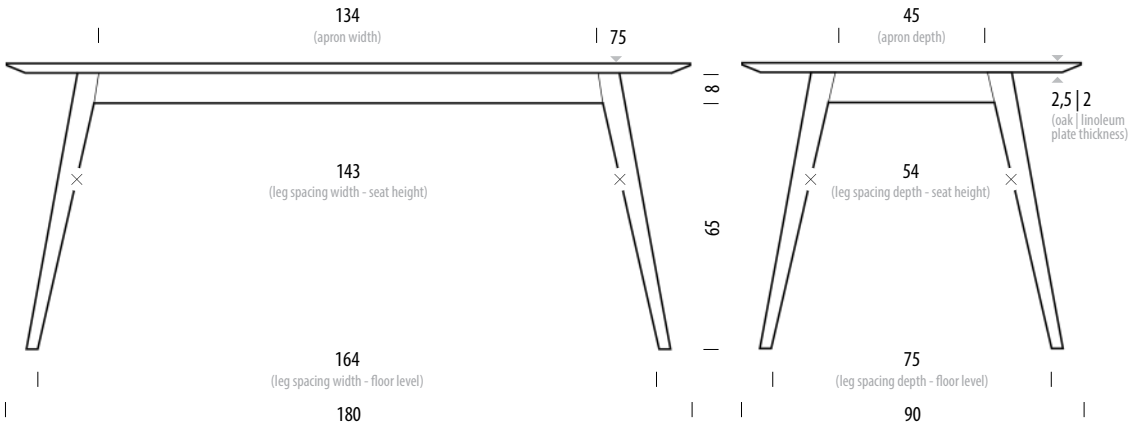

Stafa Table 200

Base Solid oak, Plate Solid oak / Linoleum

Version: 1-6-2024

Basic info

Design	Salih Teskeredžić	
Product size	W: 200, D: 90, H: 75	
Packaging	W: 206, D: 93, H: 13	
Volume	0,25 m³	
Net weight	49,7 kg	37 kg
Gross weight	54,7 kg (oak)	41,8 kg (linoleum)



Item no. 037 / 3D0

Assembly 15 min / 2 persons

Leg spacing	Width	Depth	Height
Floor level	184	75	
Seat height	163	54	
Apron height	154	45	

Plate	Thickness
	2 / 2,5

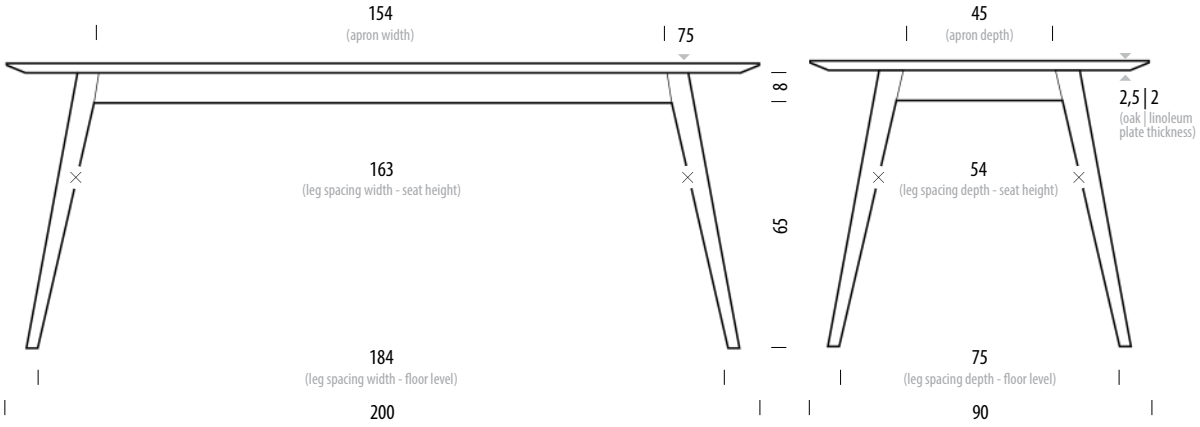

Stafa Table 220

Base Solid oak, Plate Solid oak / Linoleum

Version: 1-6-2024

Basic info

Design	Salih Teskeredžić	
Product size	W: 220, D: 90, H: 75	
Packaging	W: 226, D: 93, H: 13	
Volume	0,27 m³	
Net weight	51,8 kg	40,3 kg
Gross weight	57,2 kg (oak)	45,6 kg (linoleum)



Item no. 038 / 3D1

Assembly 15 min / 2 persons

Leg spacing	Width	Depth	Height
Floor level	184	75	
Seat height	163	54	
Apron height	154	45	

Plate	Thickness
	2 / 2,5

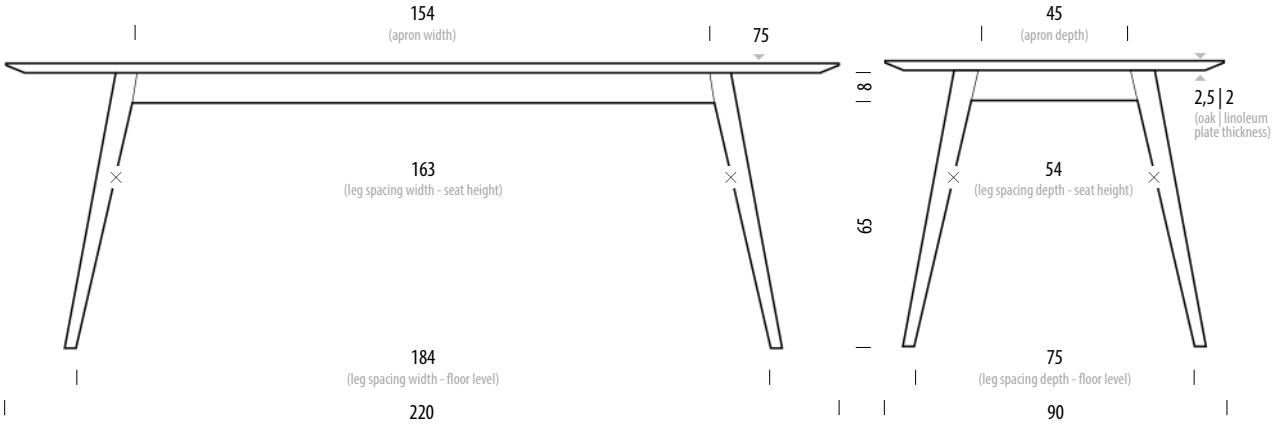

GAZZDA

Version: 1-6-2024

Stafa Table

Seating overview - Ena Chair | W: 45, D: 56, H: 84

0cm 100 140 160 180 200 220 240

Scale: 1:40

Stafa Round Table Ø90 **Size (cm)**
Item no: 100 W: Ø90 H: 75

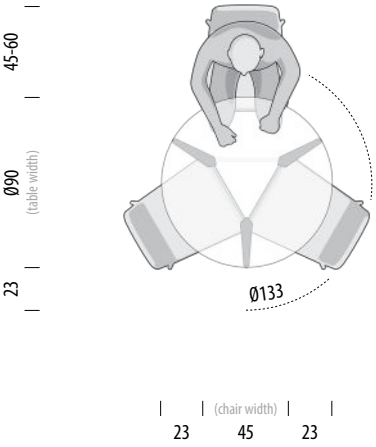

Stafa Table 80 x 80 **Size (cm)**
Item no: 2F5 / 381 W: 80 D: 80 H: 75

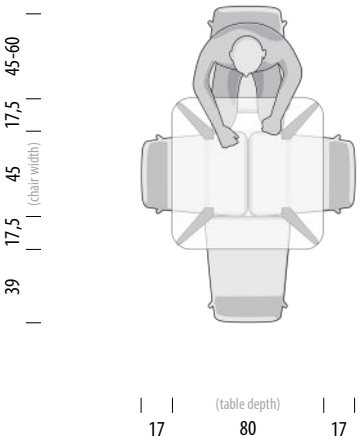

Stafa Table 140 x 90 **Size (cm)**
Item no: 034 / 3CD W: 140 D: 90 H: 75

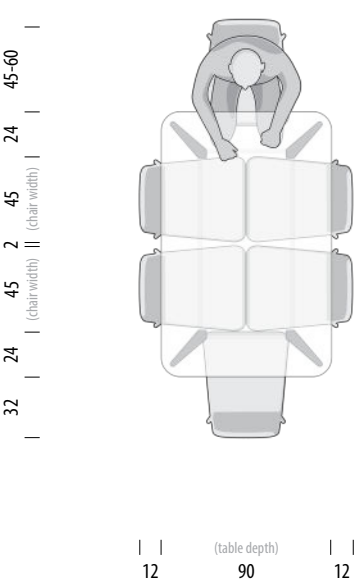

Stafa Table 160 x 90 **Size (cm)**
Item no: 035 / 3CE W: 160 D: 90 H: 75

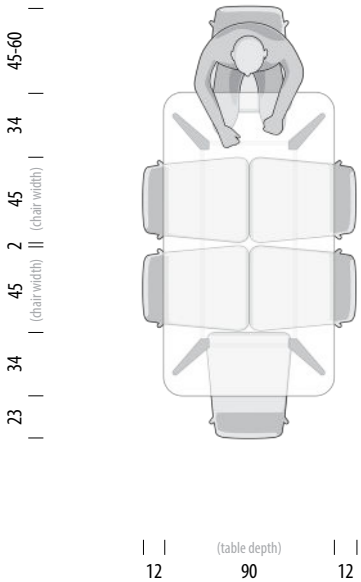

GAZZDA

Stafa Table

Seating overview - Ena Chair | W: 45, D: 56, H: 84

Version: 1-6-2024

0cm 100 140 160 180 200 220 240

Scale: 1:40

Stafa Table 180 x 90 **Size (cm)**
Item no: 036 / 3CF W: 180 D: 90 H: 75

deepest chair fit
6 chairs

max. seating places
8 chairs

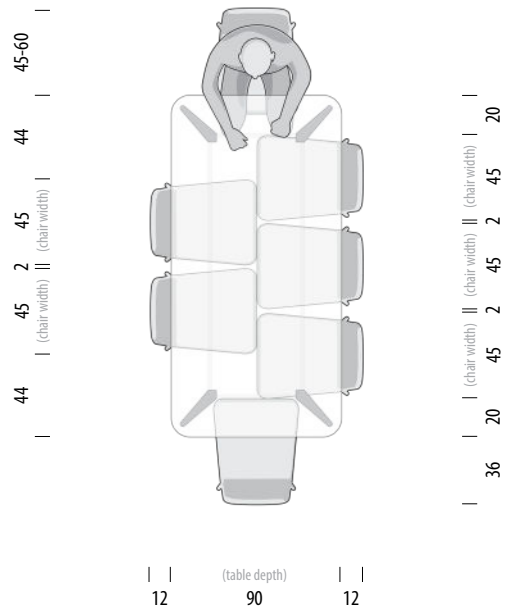

Stafa Table 200 x 90 **Size (cm)**
Item no: 037 / 3D0 W: 200 D: 90 H: 75

deepest chair fit
6 chairs

max. seating places
8 chairs

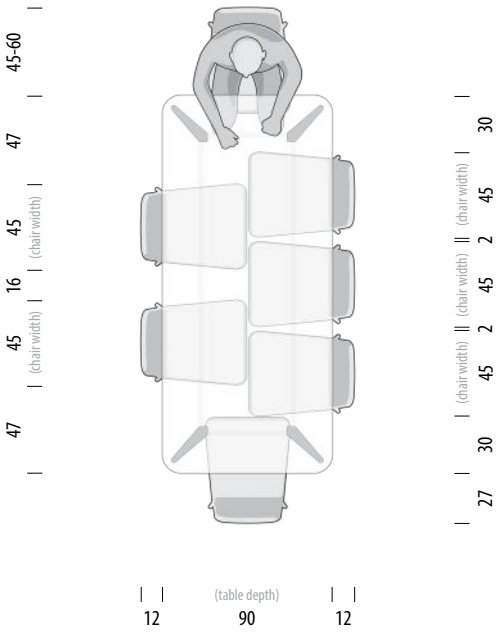

Stafa Table 220 x 90 **Size (cm)**
Item no: 038 / 3D1 W: 220 D: 90 H: 75

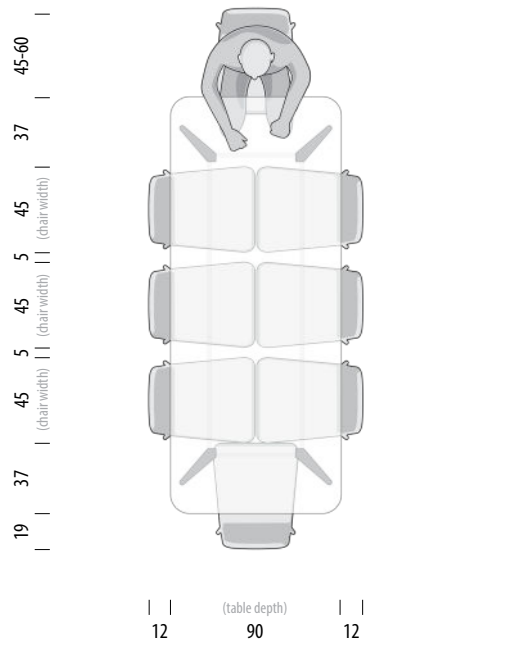

GAZZDA

Version: 1-6-2024

Stafa Table

Seating overview - Fawn Chair | W: 48, D: 48, H: 79

0cm 100 140 160 180 200 220 240

Scale: 1:40

Stafa Round Table Ø90 **Size (cm)**
Item no: 100 W: Ø90 H: 75

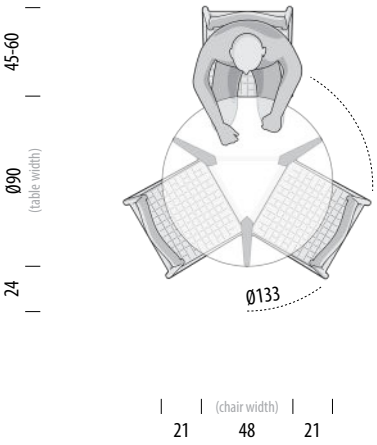

Stafa Table 80 x 80 **Size (cm)**
Item no: 2F5 / 381 W: 80 D: 80 H: 75

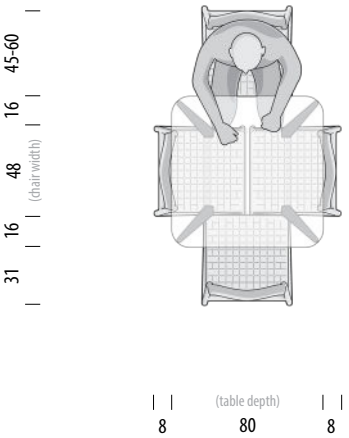

Stafa Table 140 x 90 **Size (cm)**
Item no: 034 / 3CD W: 140 D: 90 H: 75

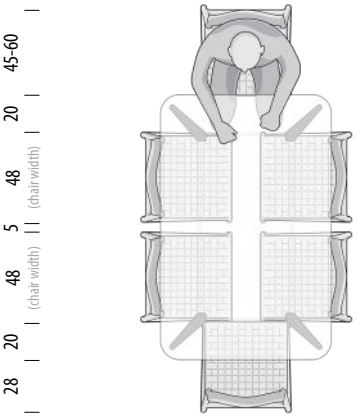

Stafa Table 160 x 90 **Size (cm)**
Item no: 035 / 3CE W: 160 D: 90 H: 75

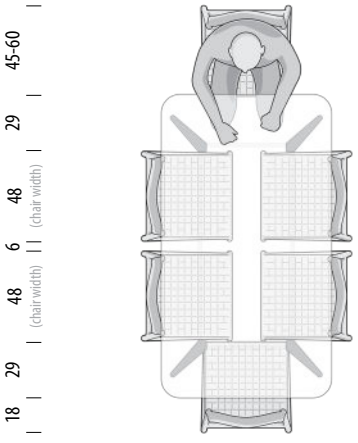

GAZZDA

Stafa Table

Seating overview - Fawn Chair | W: 48, D: 48, H: 79

0cm 100 140 160 180 200 220 240

Scale: 1:40

Version: 1-6-2024

Stafa Table 180 x 90 **Size (cm)**
Item no: 036 / 3CF W: 180 D: 90 H: 75

deepest chair fit
6 chairs

max. seating places
8 chairs

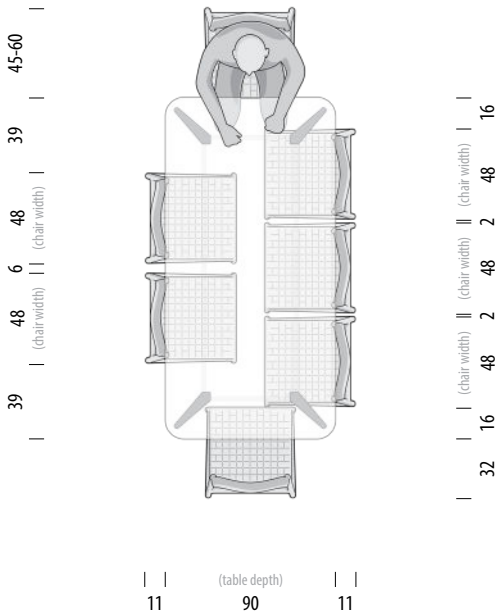

Stafa Table 200 x 90 **Size (cm)**
Item no: 037 / 3D0 W: 200 D: 90 H: 75

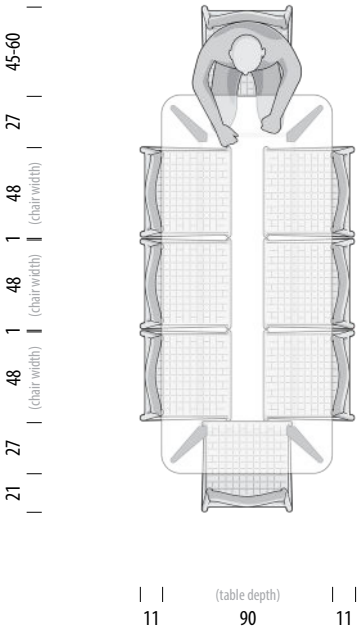

Stafa Table 220 x 90 **Size (cm)**
Item no: 038 / 3D1 W: 220 D: 90 H: 75

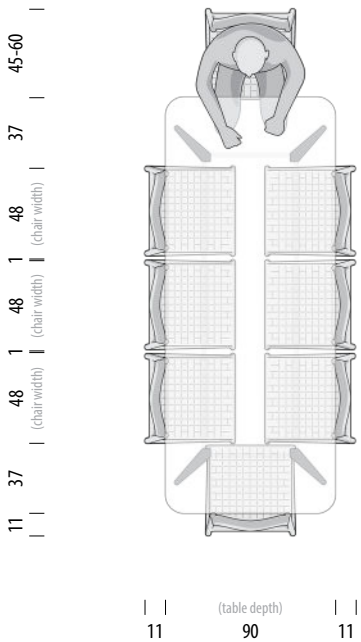

GAZZDA

Version: 1-6-2024

Stafa Table

Seating overview - Nora Chair | W: 45, D: 47, H: 79

0cm 100 140 160 180 200 220 240

Scale: 1:40

Stafa Round Table Ø90 **Size (cm)**
Item no: 100 W: Ø90 H: 75

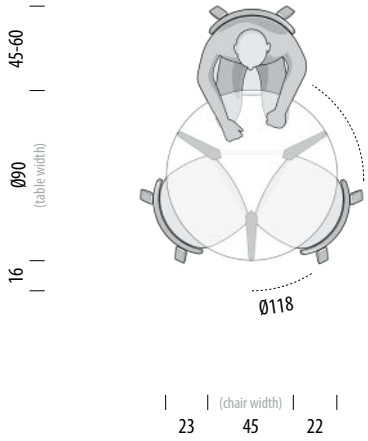

Stafa Table 80 x 80 **Size (cm)**
Item no: 2F5 / 381 W: 80 D: 80 H: 75

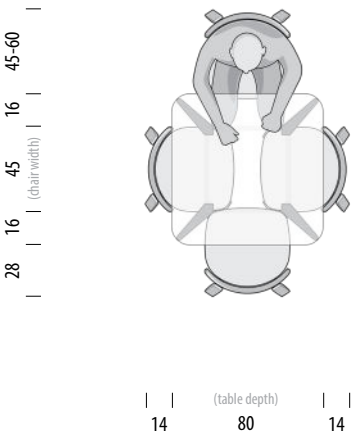

Stafa Table 140 x 90 **Size (cm)**
Item no: 034 / 3CD W: 140 D: 90 H: 75

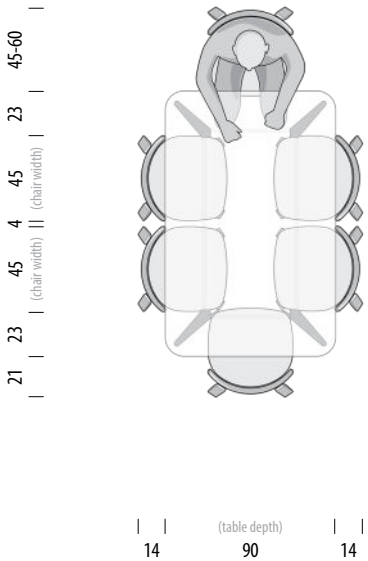

Stafa Table 160 x 90 **Size (cm)**
Item no: 035 / 3CE W: 160 D: 90 H: 75

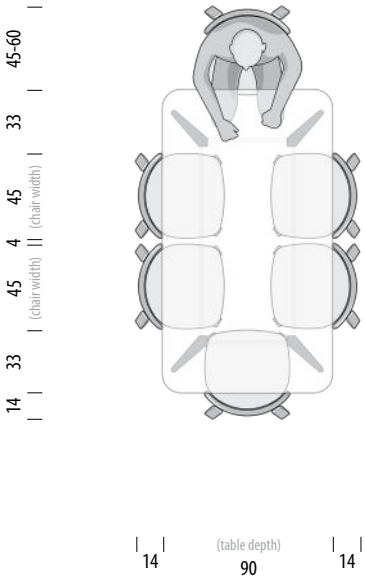

GAZZDA

Stafa Table

Seating overview - Nora Chair | W: 45, D: 47, H: 79

0cm 100 140 160 180 200 220 240

Scale: 1:40

Version: 1-6-2024

Stafa Table 180 x 90 **Size (cm)**
Item no: 036 / 3CF W: 180 D: 90 H: 75

deepest chair fit
6 chairs

max. seating places
8 chairs

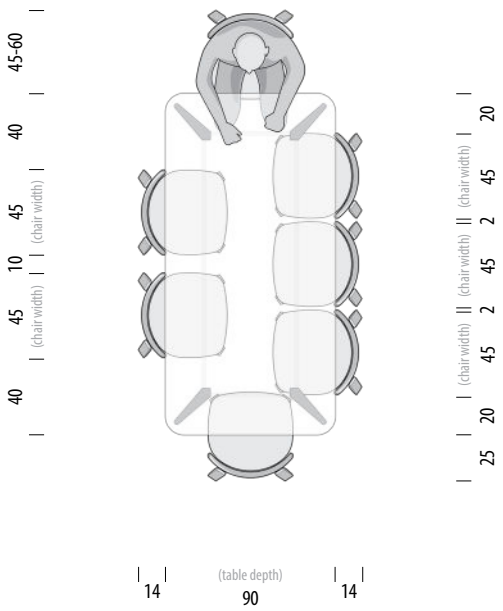

Stafa Table 200 x 90 **Size (cm)**
Item no: 037 / 3D0 W: 200 D: 90 H: 75

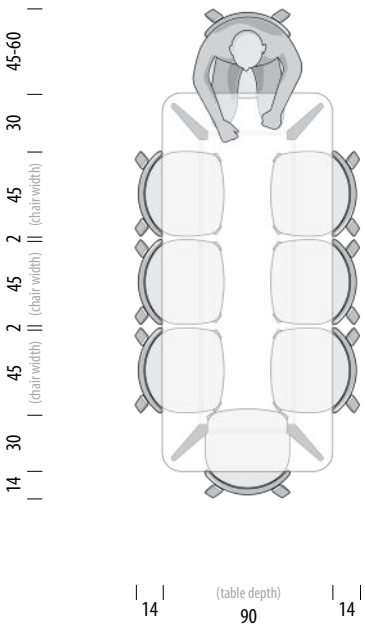

Stafa Table 220 x 90 **Size (cm)**
Item no: 038 / 3D1 W: 220 D: 90 H: 75

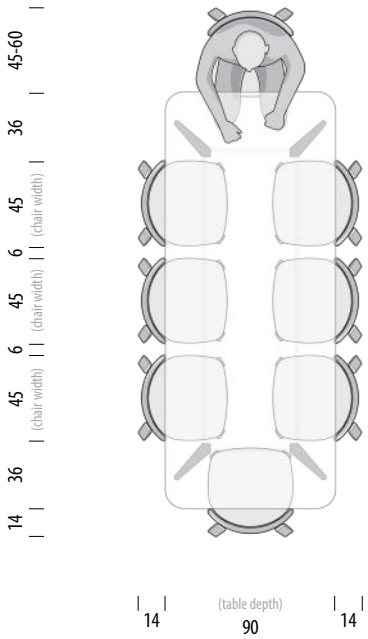

GAZZDA

Version: 1-6-2024

Stafa Table

Seating overview - Book Side Chair | W: 53,5, D: 51,5, H: 83

0cm 100 140 160 180 200 220 240

Scale: 1:40

Stafa Round Table Ø90 **Size (cm)**
Item no: 100 W: Ø90 H: 75

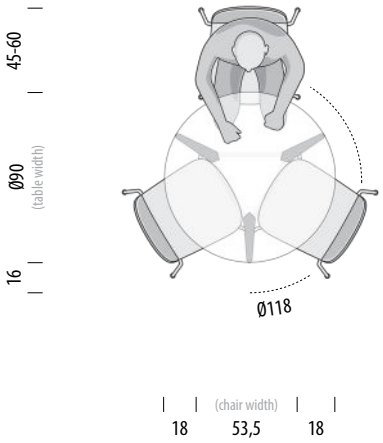

Stafa Table 80 x 80 **Size (cm)**
Item no: 2F5 / 381 W: 80 D: 80 H: 75

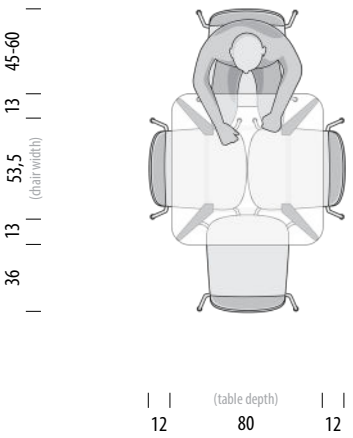

Stafa Table 140 x 90 **Size (cm)**
Item no: 034 / 3CD W: 140 D: 90 H: 75

deepest chair fit
4 chairs

max. seating places
6 chairs

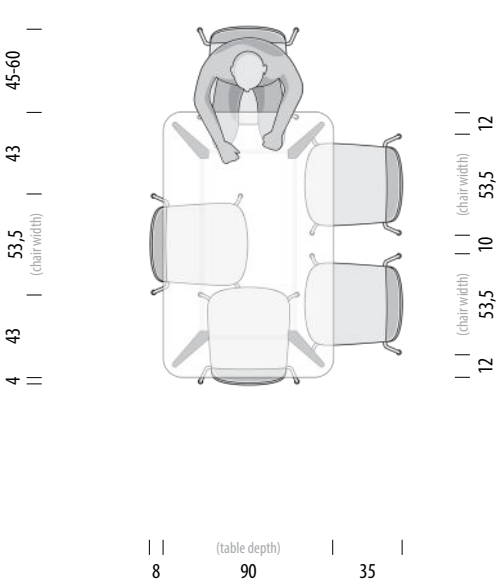

Stafa Table 160 x 90 **Size (cm)**
Item no: 035 / 3CE W: 160 D: 90 H: 75

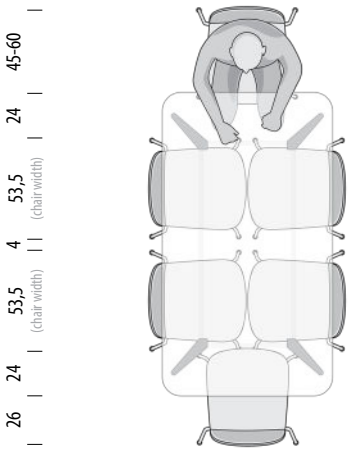

GAZZDA

Stafa Table

Seating overview - Book Side Chair | W: 53,5, D: 51,5, H: 83

0cm 100 140 160 180 200 220 240

Scale: 1:40

Version: 1-6-2024

Stafa Table 180 x 90 **Size (cm)**
Item no: 036 / 3CF W: 180 D: 90 H: 75

deepest chair fit
6 chairs

max. seating places
8 chairs

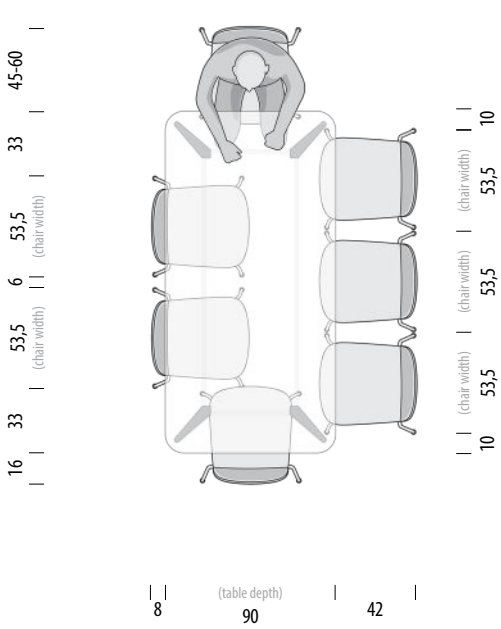

Stafa Table 200 x 90 **Size (cm)**
Item no: 037 / 3D0 W: 200 D: 90 H: 75

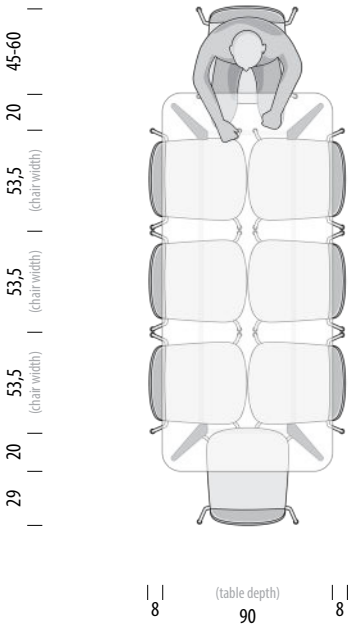

Stafa Table 220 x 90 **Size (cm)**
Item no: 038 / 3D1 W: 220 D: 90 H: 75

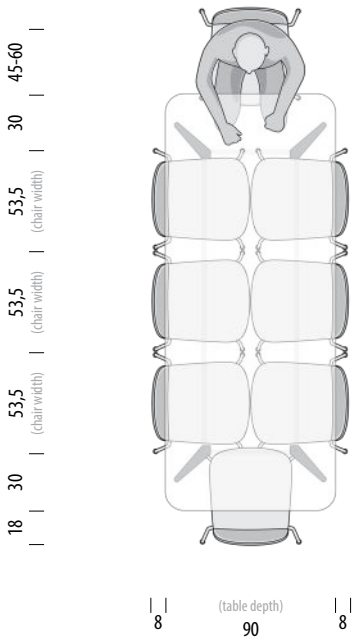

GAZZDA

Version: 1-6-2024

Stafa Table

Seating overview - Book Armchair | W: 62, D: 53, H: 83

0cm 100 140 160 180 200 220 240

Scale: 1:40

Stafa Round Table Ø90 **Size (cm)**
Item no: 100 W: Ø90 H: 75

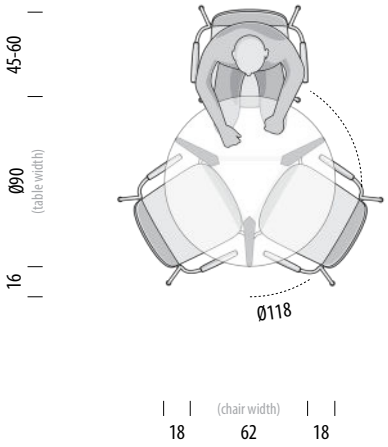

Stafa Table 80 x 80 **Size (cm)**
Item no: 2F5 / 381 W: 80 D: 80 H: 75

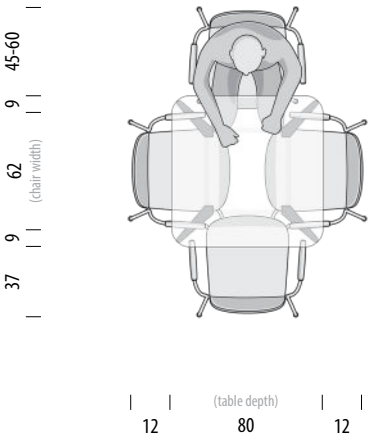

Stafa Table 140 x 90 **Size (cm)**
Item no: 034 / 3CD W: 140 D: 90 H: 75

deepest chair fit
4 chairs

max. seating places
6 chairs

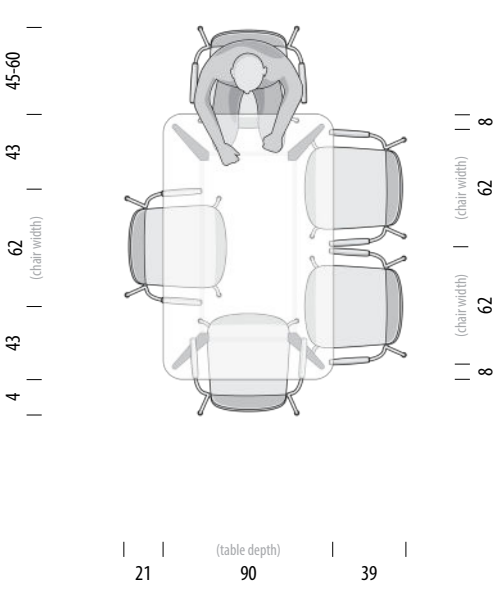

Stafa Table 160 x 90 **Size (cm)**
Item no: 035 / 3CE W: 160 D: 90 H: 75

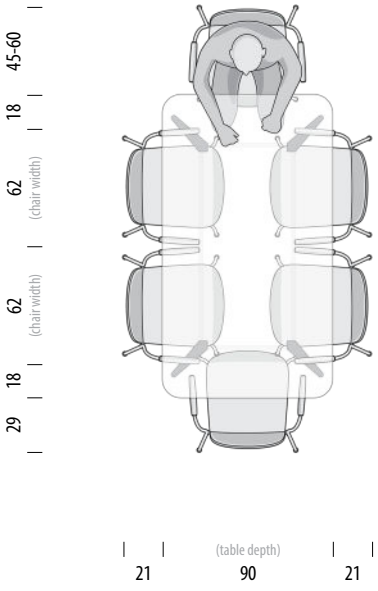

GAZZDA

Stafa Table

Seating overview - Book Armchair | W: 62, D: 53, H: 83

0cm 100 140 160 180 200 220 240

Scale: 1:40

Version: 1-6-2024

Stafa Table 180 x 90 **Size (cm)**
Item no: 036 / 3CF W: 180 D: 90 H: 75

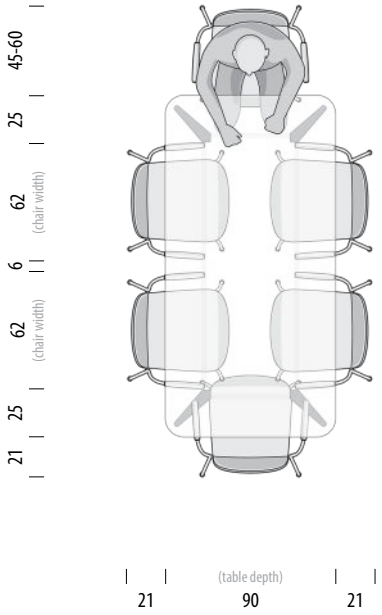

Stafa Table 200 x 90 **Size (cm)**
Item no: 037 / 3D0 W: 200 D: 90 H: 75

deepest chair fit
6 chairs

max. seating places
8 chairs

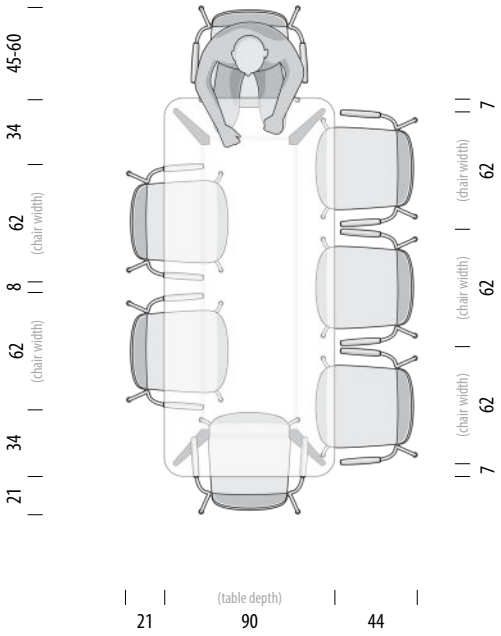

Stafa Table 220 x 90 **Size (cm)**
Item no: 038 / 3D1 W: 220 D: 90 H: 75

deepest chair fit
6 chairs

max. seating places
8 chairs

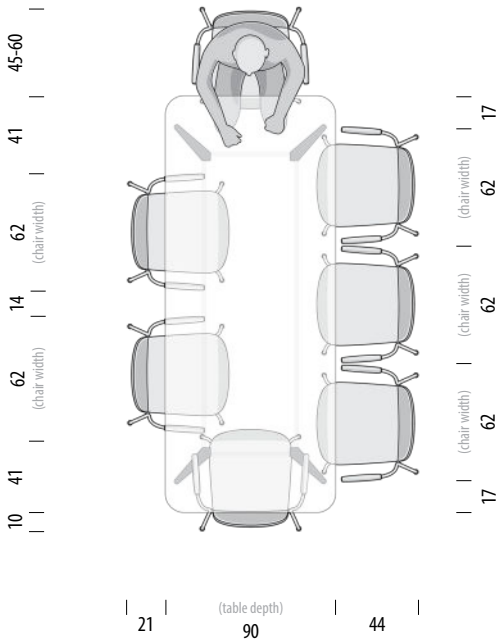

GAZZDA

Stafa Table

Seating overview - Muna Chair | W: 53, D: 53, H: 75

Version: 1-6-2024

0cm 100 140 160 180 200 220 240

Scale: 1:40

Stafa Round Table Ø90 **Size (cm)**
Item no: 100 W: Ø90 H: 75

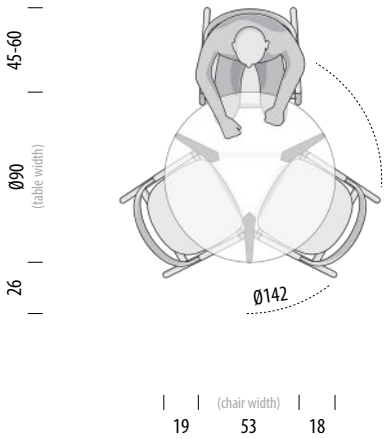

Stafa Table 80 x 80 **Size (cm)**
Item no: 2F5 / 381 W: 80 D: 80 H: 75

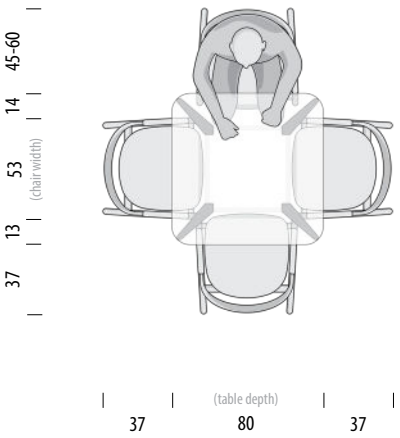

Stafa Table 140 x 90 **Size (cm)**
Item no: 034 / 3CD W: 140 D: 90 H: 75

deepest chair fit
4 chairs

max. seating places
6 chairs

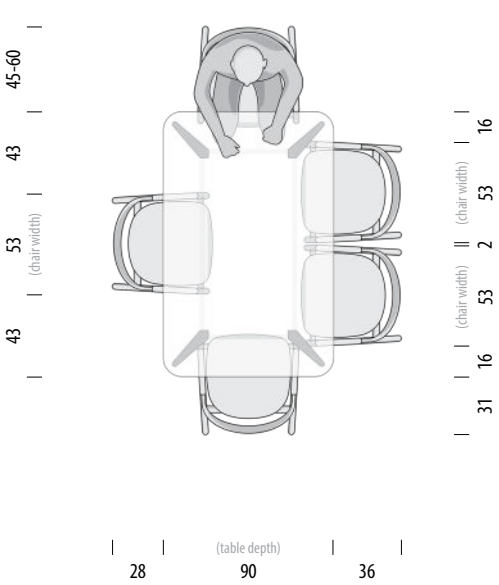

Stafa Table 160 x 90 **Size (cm)**
Item no: 035 / 3CE W: 160 D: 90 H: 75

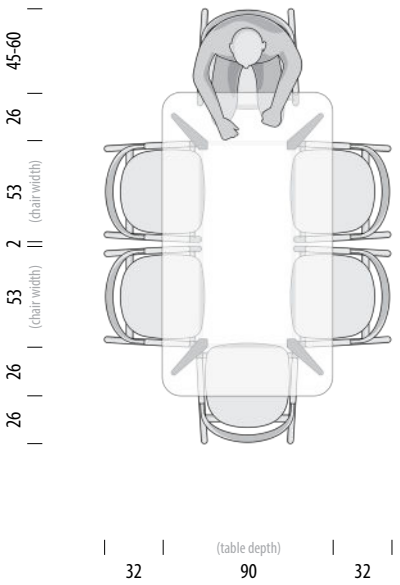

GAZZDA

Version: 1-6-2024

Stafa Table

Seating overview - Muna Chair | W: 53, D: 53, H: 75

0cm 100 140 160 180 200 220 240

Scale: 1:40

Stafa Table 180 x 90 **Size (cm)**
Item no: 036 / 3CF W: 180 D: 90 H: 75

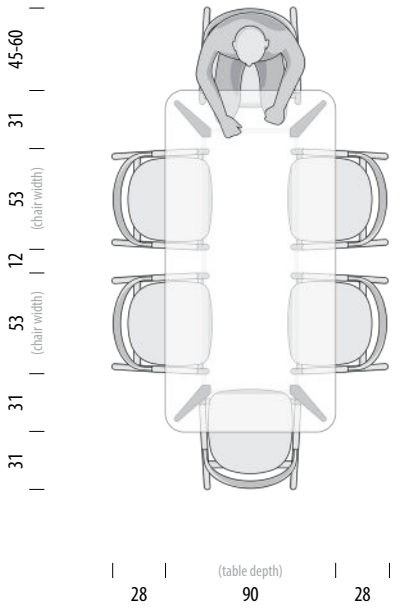

Stafa Table 200 x 90 **Size (cm)**
Item no: 037 / 3D0 W: 200 D: 90 H: 75

deepest chair fit
6 chairs

max. seating places
8 chairs

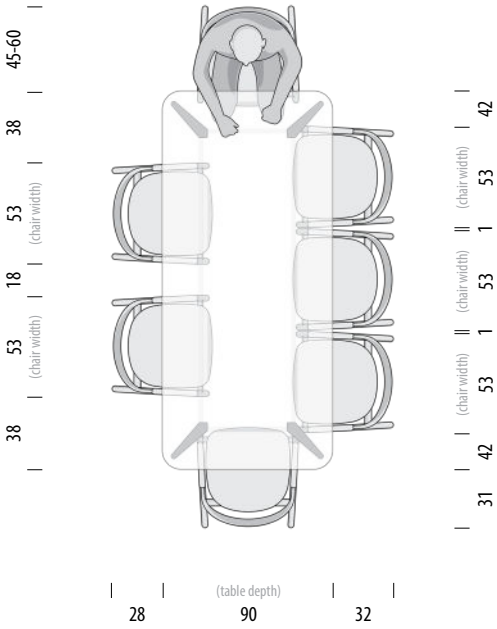

Stafa Table 220 x 90 **Size (cm)**
Item no: 038 / 3D1 W: 220 D: 90 H: 75

deepest chair fit
6 chairs

max. seating places
8 chairs

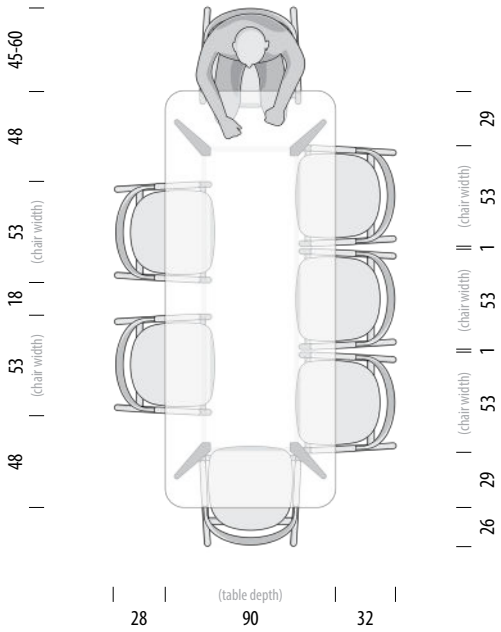

GAZZDA

Version: 1-6-2024

Stafa Table

Seating overview - Ava Chair | W: 56, D: 53, H: 77

0cm 100 140 160 180 200 220 240

Scale: 1:40

Stafa Round Table Ø90 **Size (cm)**
Item no: 100 W: Ø90 H: 75

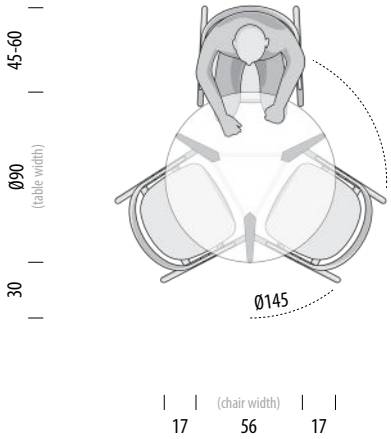

Stafa Table 80 x 80 **Size (cm)**
Item no: 2F5 / 381 W: 80 D: 80 H: 75

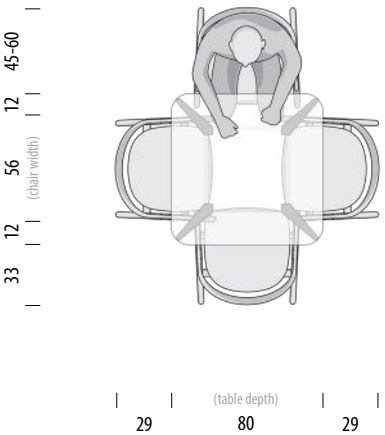

Stafa Table 140 x 90 **Size (cm)**
Item no: 034 / 3CD W: 140 D: 90 H: 75

deepest chair fit
4 chairs

max. seating places
6 chairs

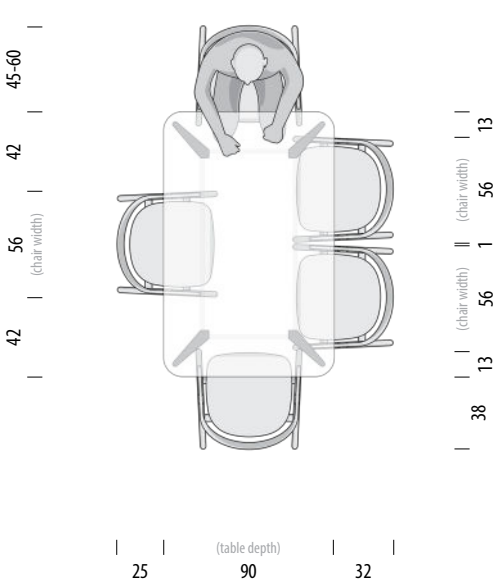

Stafa Table 160 x 90 **Size (cm)**
Item no: 035 / 3CE W: 160 D: 90 H: 75

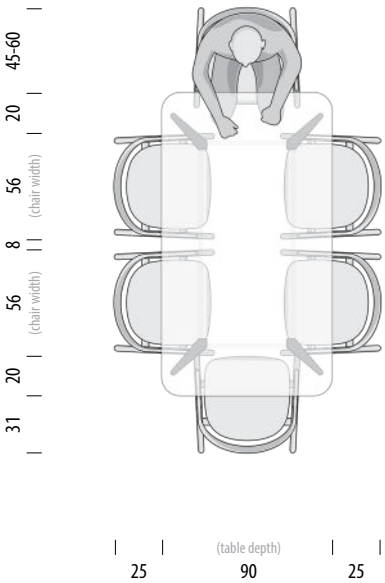

GAZZDA

Version: 1-6-2024

Stafa Table

Seating overview - Ava Chair | W: 56, D: 53, H: 77

0cm 100 140 160 180 200 220 240

Scale: 1:40

Stafa Table 180 x 90 **Size (cm)**
Item no: 036 / 3CF W: 180 D: 90 H: 75

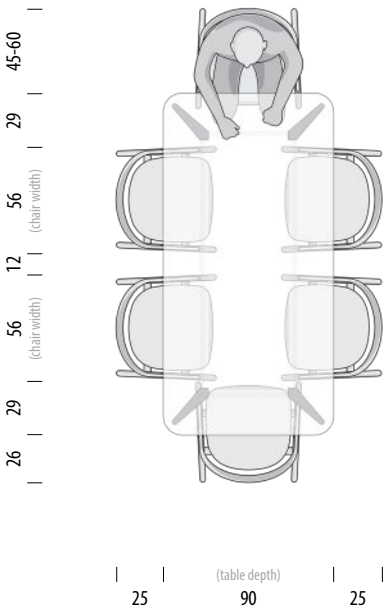

Stafa Table 200 x 90 **Size (cm)**
Item no: 037 / 3D0 W: 200 D: 90 H: 75

deepest chair fit
6 chairs

max. seating places
8 chairs

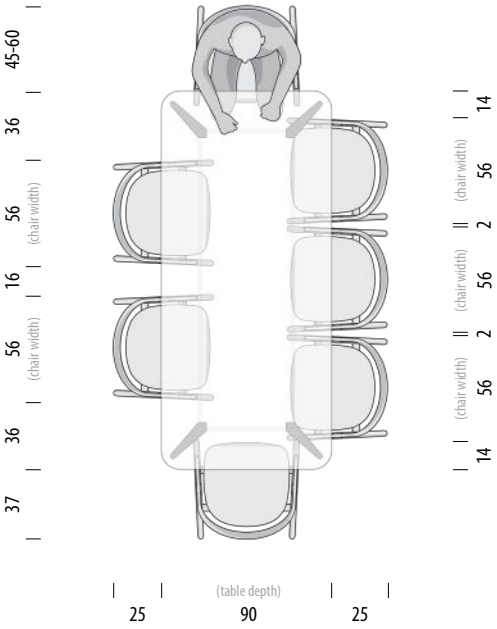

Stafa Table 220 x 90 **Size (cm)**
Item no: 038 / 3D1 W: 220 D: 90 H: 75

deepest chair fit
6 chairs

max. seating places
8 chairs

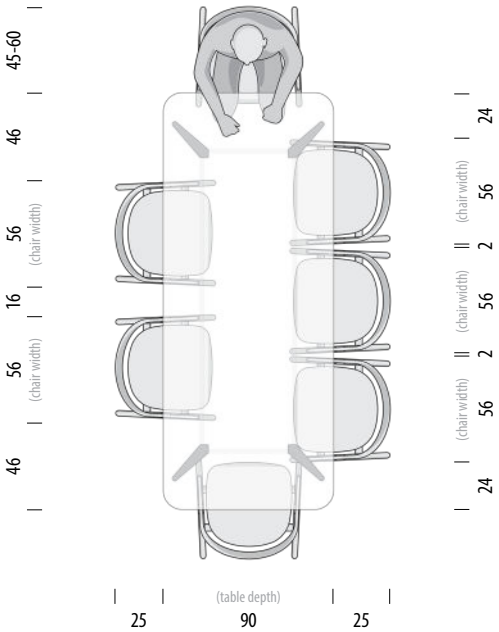

GAZZDA

Stafa Table

Seating overview - Ava Bench | W: 120, D: 53, H: 77,5

0cm 100 140 160 180 200 220 240

Scale: 1:40

Version: 1-6-2024

Stafa table 140 x 90 **Size (cm)**
Item no: 034 / 3CD W: 140 D: 90 H: 75

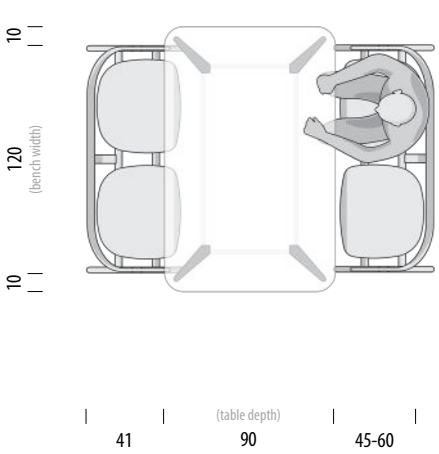

Stafa table 160 x 90 **Size (cm)**
Item no: 035 / 3CE W: 160 D: 90 H: 75

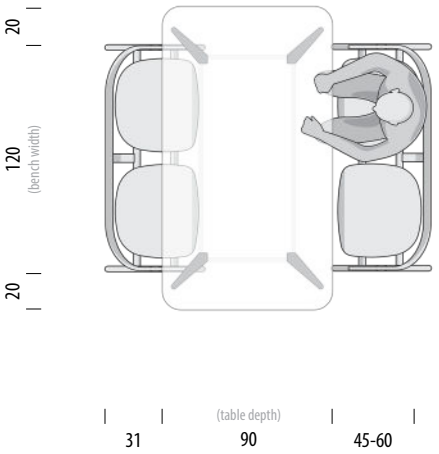

Stafa table 180 x 90 **Size (cm)**
Item no: 036 / 3CF W: 180 D: 90 H: 75

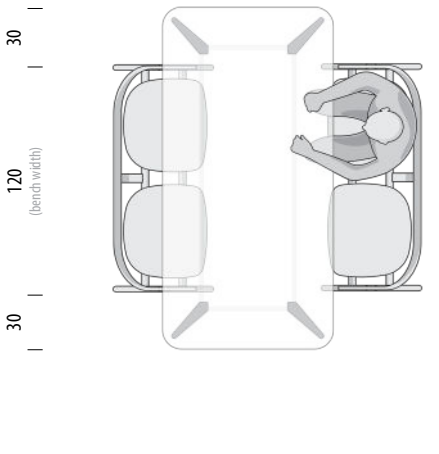

Stafa table 200 x 90 **Size (cm)**
Item no: 037 / 3D0 W: 200 D: 90 H: 75

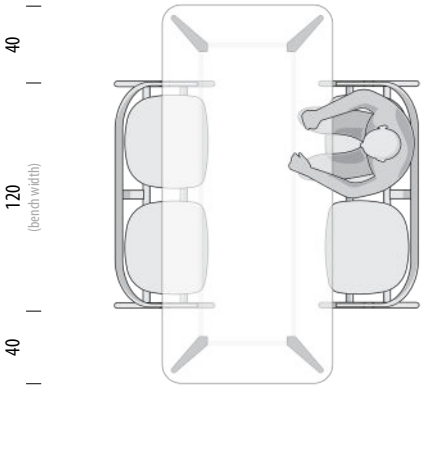

GAZZDA

Stafa Table

Seating overview - Ava Bench | W: 120, D: 53, H: 77,5

0cm 100 140 160 180 200 220 240

Scale: 1:40

Version: 1-6-2024

Stafa table 220 x 90 **Size (cm)**
Item no: 038 / 3D1 W: 220 D: 90 H: 75

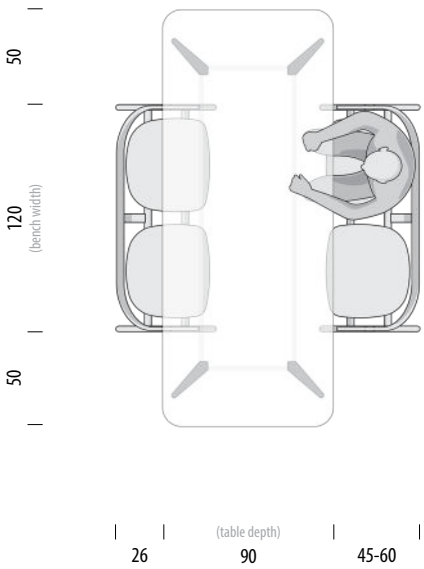

Stafa Table

Available materials

Version: 1-6-2024

Legs | Solid oak



Oiled
1015
White oil



Oiled
1505
Natural oil



Oiled
163
Smoked oil

Plate | Solid oak



Oiled
1015
White oil



Oiled
1505
Natural oil

Plate | Desktop linoleum - by Forbo

4176
Mushroom



4184
Dark olive



4179
Smokey blue



4023
Nero